INSTRUCTION MANUAL

DRAGON

ROSCAMAT®

TECNOSPIRO MACHINE TOOL, S.L.U.
P.I Pla dels Vinyats I, s/n nau 1
08250 - Sant Joan de Vilatorrada. Barcelona - España
Telf. +34 938 76 43 59
E-mail: roscamat@roscamat.com

ISO 9001
BUREAU VERITAS
Certification

TECNOSPIRO
MACHINE TOOL SLU

DESIGN & QUALITY
ROSCAMAT
Made in Barcelona

www.roscamat.com

TABLE OF CONTENTS

1 ABOUT THIS MANUAL

This is the instruction manual for the ROSCAMAT® DRAGON tapping machine

-ORIGINAL MANUAL-

Intellectual/Industrial Property:

Tecnospiro Machine Tool, S.L.U. (the Company) hereby informs you that the entire contents of this document, including, but not limited to, the texts, images, graphic designs, brands and trade and company names, are the property of the Company or the Company holds exclusive title to them (hereafter Intellectual/Industrial Property). Copying, reproduction, distribution, publication or use of this Intellectual/Industrial Property, in full or in part, in any way or form, without the express written consent of the Company, even when quoting the source, is prohibited. Use of any content that, due to the characteristics thereof, is similar to such Intellectual/Industrial Property will likewise be considered to violate the rights of the Company to that Intellectual/Industrial Property.

1.1 CONSIDERATIONS

- ✓ Before using the equipment, make sure you read this instruction manual and follow the safety and operating instructions fully.
- ✓ All the instructions contained in this manual refer to the individual device; the end user is responsible for analysing and applying all the necessary safety measures required for the intended use.
- ✓ This manual must be kept near the device for consultation throughout its working life.
- ✓ If any part of this manual seems unclear, confusing or imprecise, please do not hesitate to contact your 3arm® and/or Roscamat® distributor.
- ✓ The contents of this manual may be subject to change without prior notice.
- ✓ If the manual is lost or damaged, contact TECNOSPIRO MACHINE TOOL, S.L.U. so we can provide you with a new one.
- ✓ This document, or any part thereof, may only be reproduced or provided to third parties with the express written authorisation of TECNOSPIRO MACHINE TOOL, S.L.U.
- ✓ Some details of the illustrations in this manual may differ from the specific device configuration. They should be understood as representative of the standard product.

Paragraphs indicating assembly, adjustment, installation and maintenance steps are indicated by brown shading.

Paragraphs containing important information are indicated by grey shading.

1.2 VERSION

Document	Revision date
Instruction Manual	23/01/2023

2 SAFETY INFORMATION

2.1 SCOPE OF APPLICATION

This section contains extremely important information on the safe operation of the device and is intended for anyone involved in any stage of the life cycle of this device (transport, assembly and installation, commissioning, adjustment, training, operation, cleaning, maintenance, troubleshooting and disassembly/ decommissioning).

2.2 WARNINGS AND GENERAL CONSIDERATIONS

- ✓ The device described in this document has been built using current technology and in accordance with applicable technical standards on safety. However, misuse or improper set-up by the end user may result in a risk of injury.
- ✓ The device must only be used if it is proper working order, and all safety rules and instructions in this document must be obeyed.
- ✓ Any problem that could affect the safety of the device must be corrected immediately
- ✓ No modifications must be made to the device without due authorisation from TECNOSPIRO MACHINE TOOL, S.L.U.
- ✓ The device must only be used for the intended purpose; any other use is strictly prohibited. All use other than that indicated here will be considered misuse and is prohibited. The manufacturer assumes no liability for damage that may result from such misuse.
- ✓ The installer, owner and/or end user are responsible for determining whether the product is appropriate for each specific use, as well as determining the installation site and concretely defining the task to be performed with this product, within the limits set forth in this manual.
- ✓ Do not use it for any purpose not covered in this manual.
- ✓ The operator may only operate the device after having received applicable instructions for its use.
- ✓ It is recommended that only one operator use the device at one time; any other use must be evaluated by the installer / end user.
- ✓ Manipulating the device's moving parts and joints whilst the device is in use is strictly prohibited.
- ✓ When the manipulator is not in use, it must be left in the folded, or parked, position.
- ✓ Working parts (parts for tapping) must be correctly secured.
- ✓ Tapping materials must comply with the manufacturer's instructions.

- ✓ The operator must only use the device to perform safe movements, moving together with the device at all times to reduce the risk of uncontrolled or involuntary movement of the equipment.

- ✓ Even though the parts that present the greatest risk of possible shearing or pinching are protected and enclosed, moving and jointed parts must not be handled during use.

- ✓ The working area of the device and its closest area of influence must comply with conditions of workplace safety, health and hygiene; the installer / end user are responsible for conducting a study to ensure safety.

- ✓ The operator must remain outside the vertical path of the swing arm.

- ✓ The presence of others in the device's working area must be restricted as much as possible in order to avoid any risk to safety; if any other use is intended, a supplemental study of the risks arising from the working mode must be conducted.

- ✓ It is important for operators of this device to be familiar with and have sufficient training in the use of this product or similar equipment.

- ✓ In any event, the operator must read and understand this manual before using the device, regardless of their prior knowledge, training or experience with similar equipment; the sections on installation, operation and safety are especially critical.

- ✓ If unsure about device usage or maintenance procedures, please contact your 3arm® and/or Roscamat® distributor.

2.3 EXCLUSIONS

The device is not intended for the following uses:

- ✓ Manipulation of any components or functions of the device aside from those specified in this manual.
- ✓ Use by persons with any type of disability, or by animals
- ✓ Use by staff who have not completed occupational risk prevention training

Do not install

- ✓ Installation in corrosive areas
- ✓ Installation in dusty areas
- ✓ Installation in areas with high electromagnetic emissions
- ✓ Installation in areas with extreme temperatures (very high or very low)
- ✓ Installation in areas with high humidity
- ✓ Outdoors installation

2.4 SYMBOLS AND ICONS

- ✓ Throughout this manual and on the structure of the machine itself, you may see various symbols and icons whose meaning is summarised below:

	Hazard. General hazard symbol, usually accompanied by another symbol or a detailed description of the hazard.
	Risk of pinching
	Electrical hazard

2.5 SYSTEM INSTALLER

The system installer or end user is responsible for installing the machinery in accordance with all applicable safety measures.

The installer / end user is responsible for the following tasks:

- ✓ Location and proper installation
- ✓ Connections
- ✓ Risk assessment.
- ✓ Installation of mandatory safety and protectives features.

2.6 PERSONAL PROTECTIVE EQUIPMENT (PPE)

The following personal protective equipment should be used with this machine: **safety boots, hardhat, safety goggles and safety gloves** for transport, assembly and installation, commissioning and dismantling.

Safety footwear, safety gloves and safety goggles for adjustment, training, operation and troubleshooting.

The installer or end user is responsible for specifying the required personal protective equipment for the intended application of the machinery and to meet essential health, safety and hygiene requirements.

Operators must not wear loose clothing, rings, bracelets or watches since these may become caught in the workings of the machinery.

Hair must be tied up to prevent it getting caught in the moving parts of the machinery.

2.7 LEVEL OF TRAINING FOR PERSONNEL WHO WORK WITH THE DEVICE

Anyone who works with the machinery must have read and understood the information in the chapter on safety.

3 GENERAL DESCRIPTION AND TECHNICAL INFORMATION

3.1 MAIN PARTS

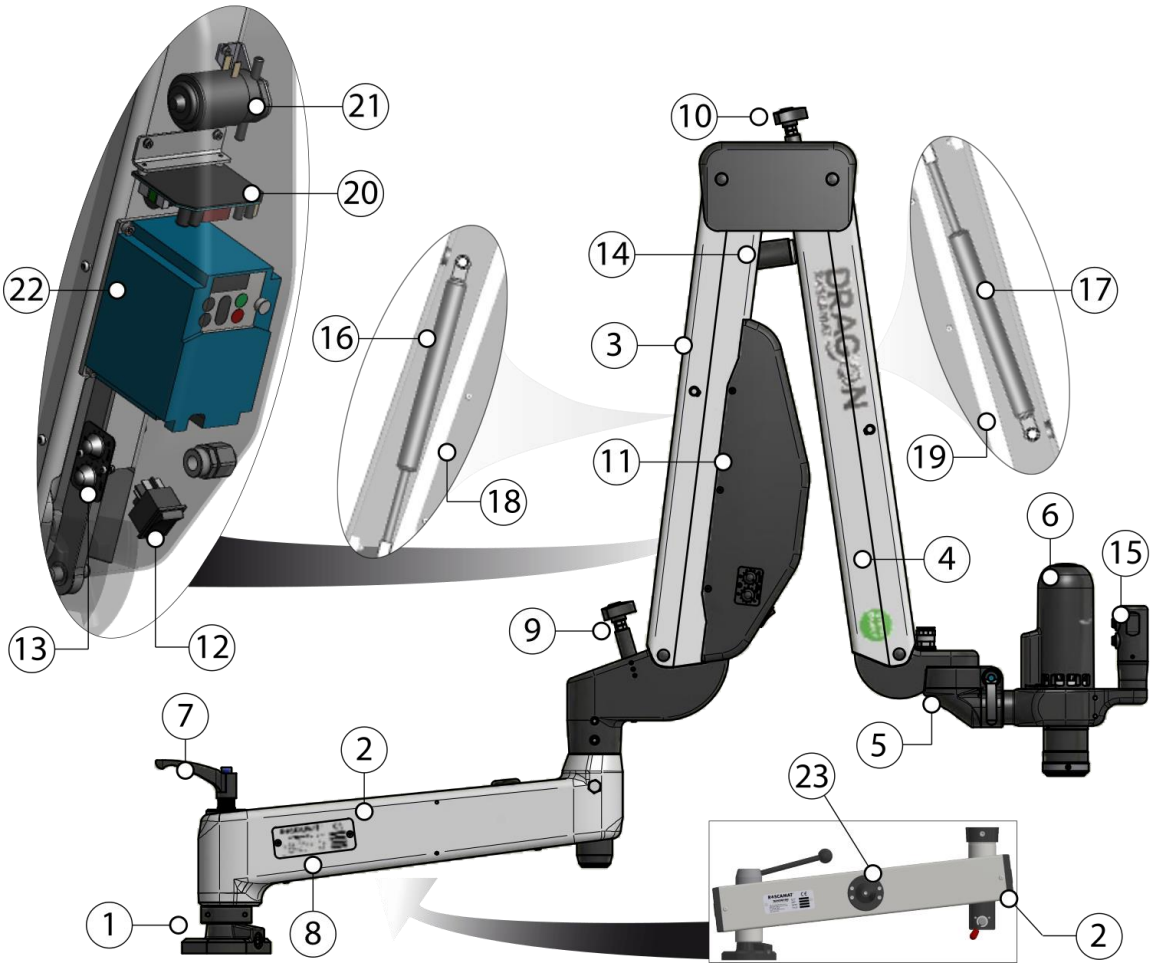

1- Base

2- Radial arm / RHC arm

3- Rear swing arm

4- Fore swing arm

5- Head assembly (V or RH)

6- Motor

7- Lock lever

8- CE mark plate

9- Rear arm adjustment knob

10- Fore arm adjustment knob

11- Electrical component housing

12- Main switch

13- Turning speed adjustment (left and right)

14- Magnet, parking lock

15- Grip

16- Rear arm spring

17- Fore arm spring

18- Rear arm beam

19- Fore arm beam

20- Electronic lubrication plate

21- Lubrication pump

22- Frequency variator

23- Chain tensioner

3.2 DESCRIPTION AND OPERATING PRINCIPLES

The machine consists of a radial parallelogram and two pendular parallelograms balanced by gas springs, and a head assembly with a double turning axis (RHM | RHC configuration). The assembly is held in place by the motor, which keeps it perpendicular to the working area.

The equipment has a high-frequency motor, controlled by a frequency variator inside the electronic component housing. The turning speed of the motor (to the left and to the right) and automatic lubrication (optional) can be controlled using the turning speed adjustment.

A modular system comprising seven quick-shift planetary gears can be used to adapt the speed and torque to meet tapping requirements.

Tool holders (tap holders), with or without safety clutch, are also connected to the motor by means of a quick-change system.

3.3 CONFIGURATIONS

	ARTICULATED HEAD ASSEMBLY	VERTICAL HEAD ASSEMBLY	LUBRICATION	CHAIN
DRAGON - V		✓		
DRAGON - V LUBRICATION		✓	✓	
DRAGON - RHM	✓			
DRAGON - RHM LUBRICATION	✓		✓	
DRAGON - RHC	✓			✓
DRAGON - RHC LUBRICATION	✓		✓	✓

3.4 DIMENSIONS

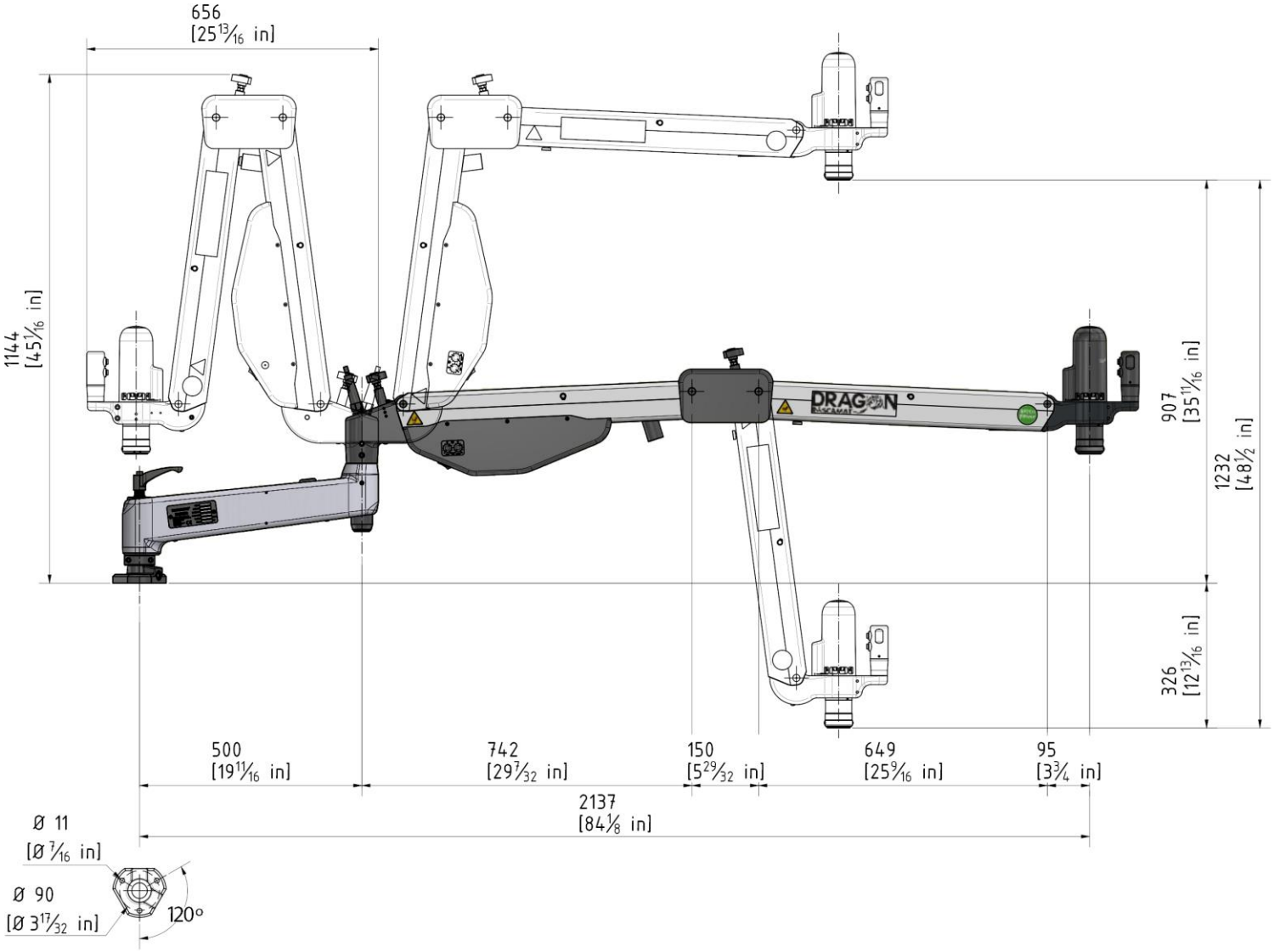

Roscamat Dragon – Vertical head assembly (VERTICAL / VERTICAL LUBRICATION)

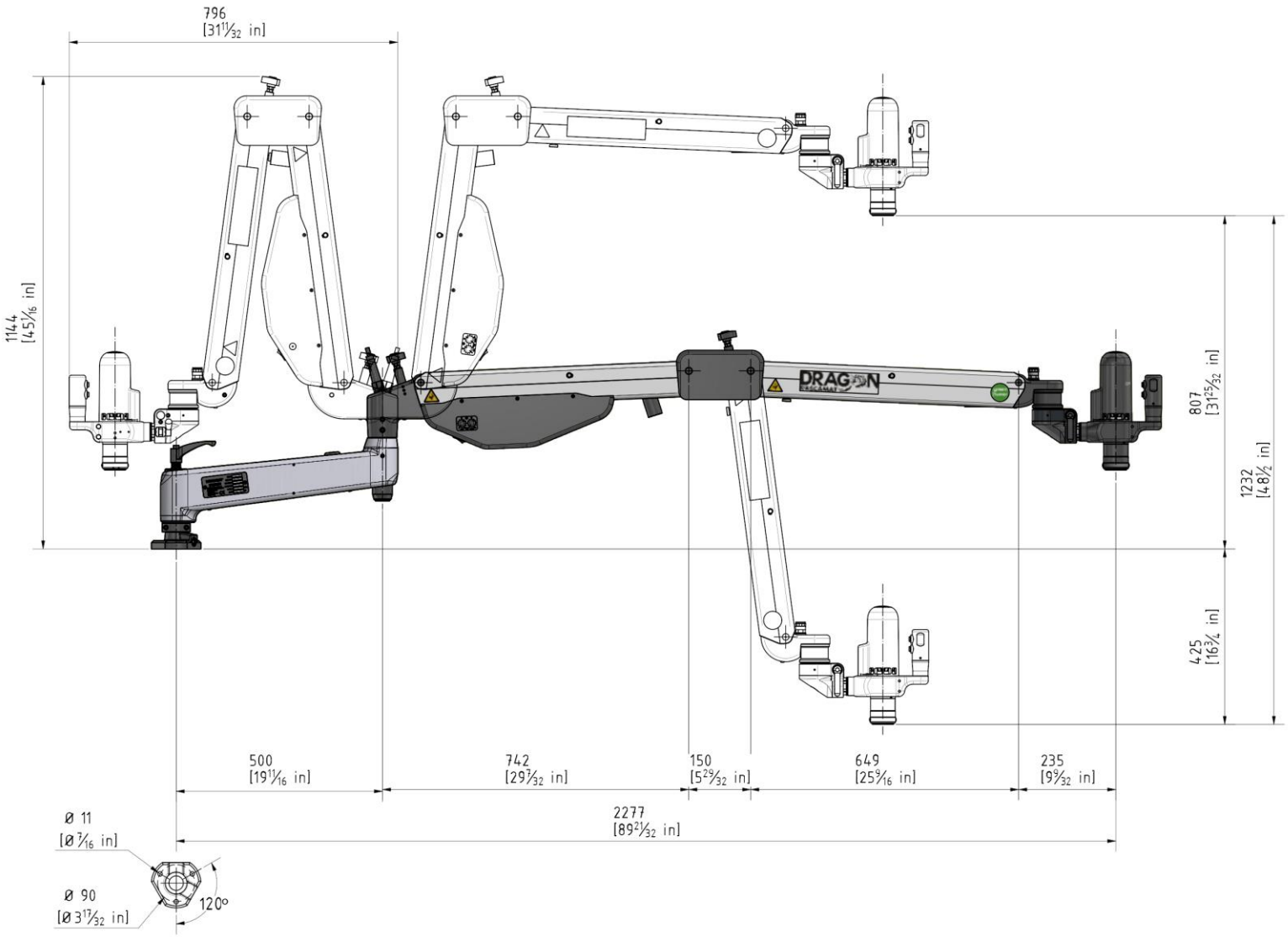

Roscamat Dragon – Articulated head assembly (RHM / RHM LUBRICATION)

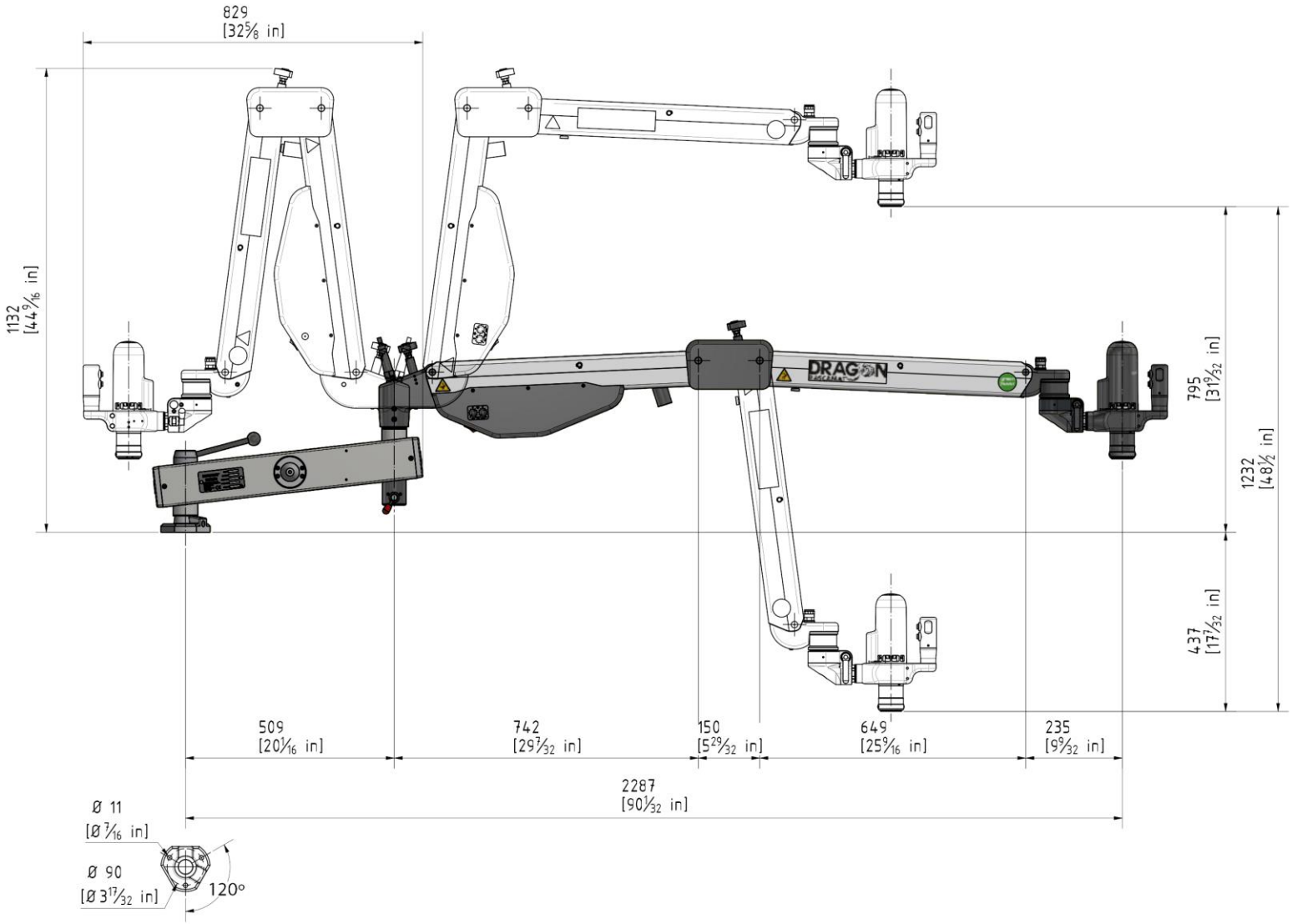

Roscamat Dragon – Articulated head assembly (RHC / RHC LUBRICATION)

3.5 MOVEMENTS

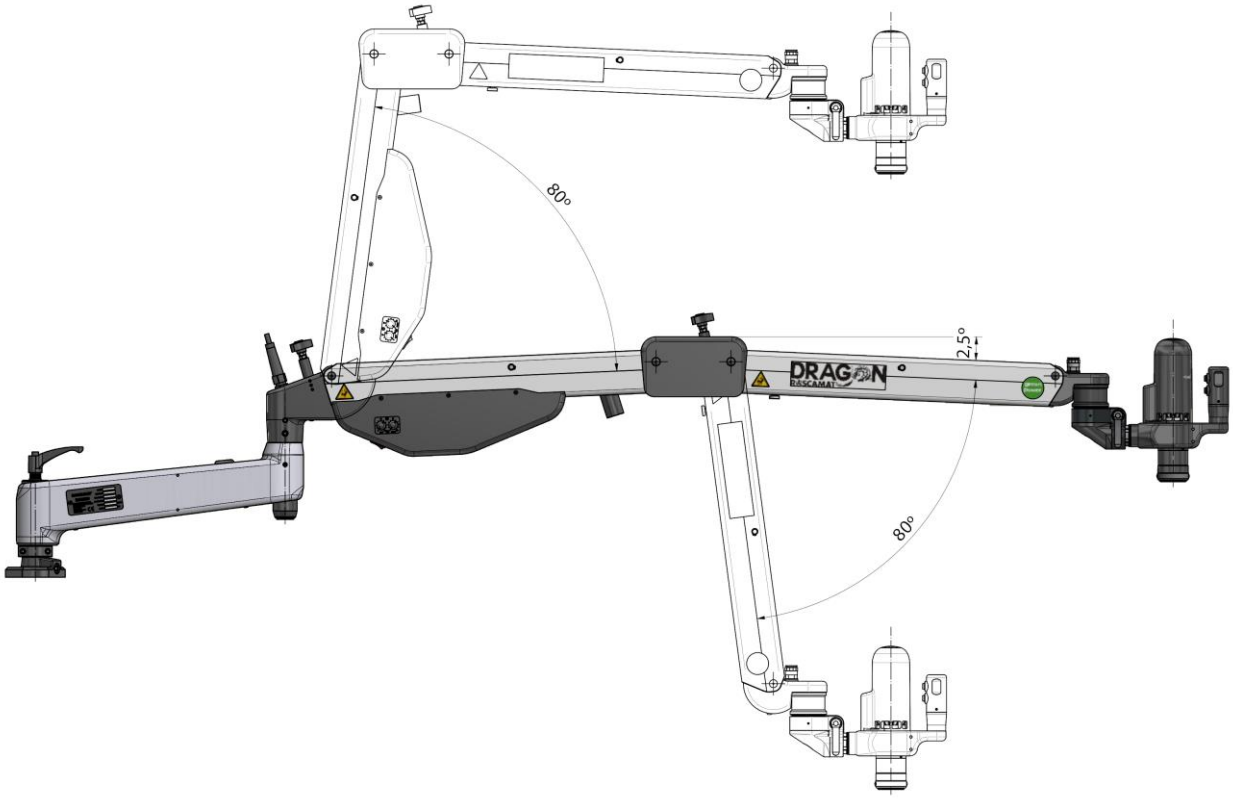

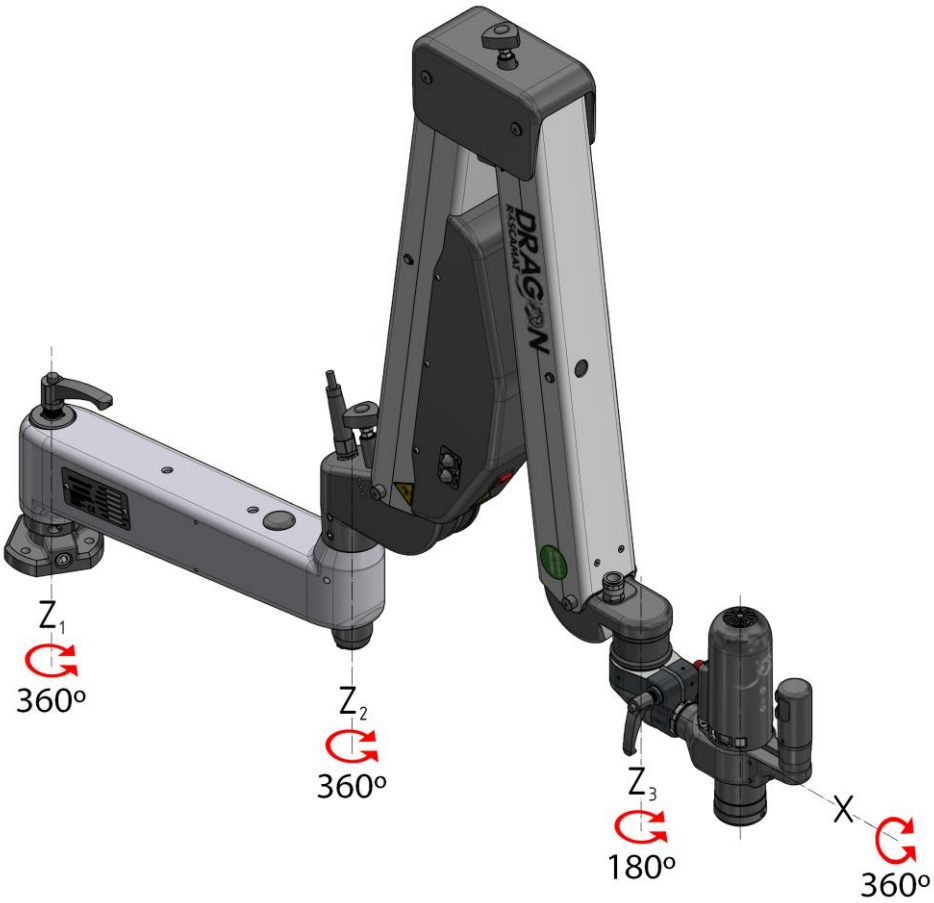

3.6 TECHNICAL SPECIFICATIONS

GENERAL TECHNICAL SPECIFICATIONS		
Tapping capacity[1]		M2-M27
Suitable materials for tapping[2]		Metals and metal and plastic materials
Speed range		90-1050 rpm
Weight	Vertical	33 kg (73 lb)
	RHM	35 kg (77 lb)
	RHC	41 kg (90 lb)
Electrical specifications		
	Power supply voltage and frequency	220–240 V 50 Hz
	Motor power	0.65 kW
	Protection class	IP 54
	Power supply voltage and frequency	100–120 V 60 Hz
	Motor power	0.65 kW
	Protection class	IP 54
Working conditions		
	Temperature	-10 to +50 °C (14 –122 °F)
	Relative humidity	Max. 70%
	Environment	Industrial environments

3.7 IDENTIFICATION PLATE

A metal plate on the radial arm of the machine provides details of the following:

Manufacturer (name, address and company name), manufacture date, serial number, model, power supply voltage and frequency, motor power and CE and UKCA mark.

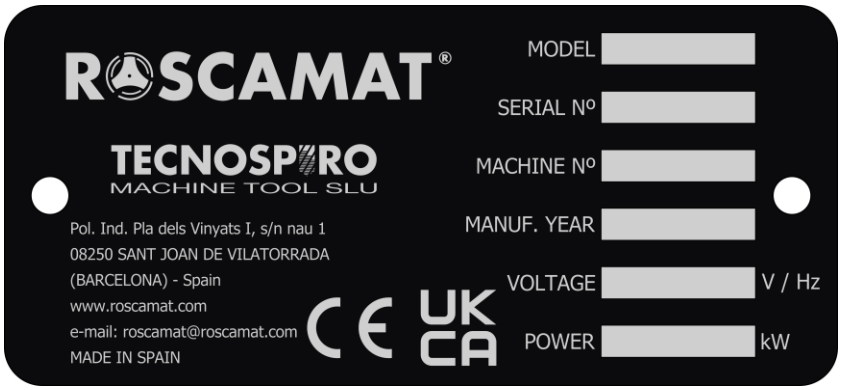

[1] Minimum and maximum tapping values for tapping with 90 kg/mm² steel.
[2] In general, all types of metals and plastics can be used. Special care must be taken with materials such as magnesium (highly flammable) and certain plastics. Any other type of material must be subject to an additional study to identify risks by the installer or end user.

4 INSTALLATION, ADJUSTMENTS AND OPERATION

4.1 INSTALLATION

1. Remove the equipment from the original packing
2. Anchor the base using three bolts suited to the chosen installation site (Recommended torque 45Nm). Alternative methods may be used if approved by the installer.
3. Connect the power supply

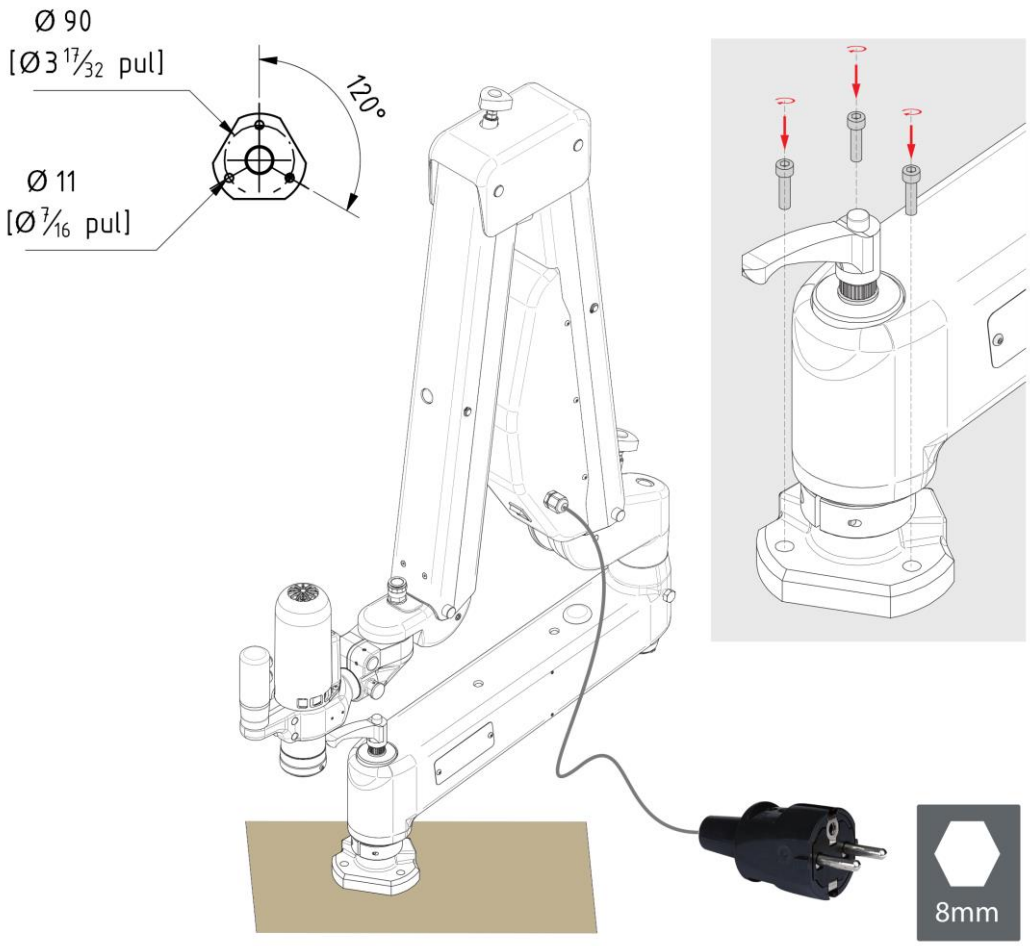

INSTALLATION

✓ The installation site must be horizontal to prevent drifting or shifting.

INSTALLATION SITE

Do not install the device in areas such as:

- ✓ Explosion or fire hazard zones
- ✓ Outdoor areas
- ✓ Areas with corrosive atmospheres
- ✓ Areas with extreme temperatures (very high or very low)
- ✓ Areas with high humidity
- ✓ Dusty areas
- ✓ Areas with high electromagnetic emissions

4.2 MODULE CHANGEOVER

1. Place the machine in the folded or parked position.
2. To remove the module:
   - Rotate the chuck to the right **(B)** (align the red dots).
   - Remove the module.
3. To insert the module:
   - Insert the module (align the red dots).
   - Rotate the chuck to the left **(A)** (lock: align the green and red dots).
   - Check that the module is held securely in place.
4. Readjust the arms *[see BALANCING THE ARM p. 18].*

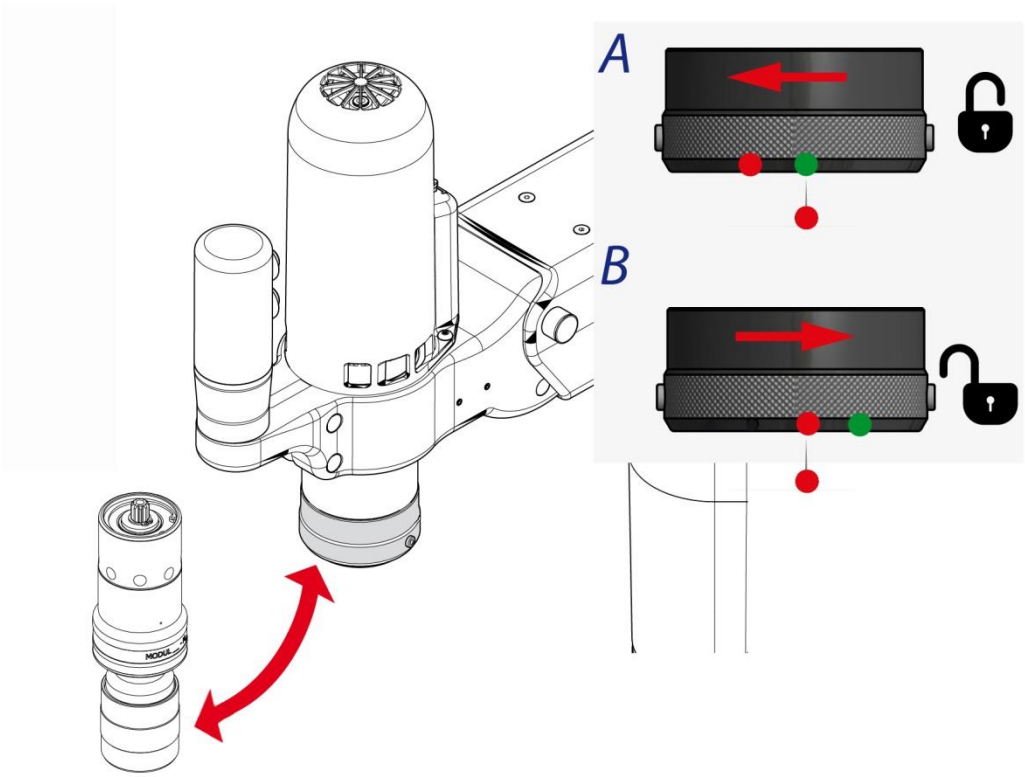

PLEASE NOTE

✓ When removing the module, the arm may shift abruptly.

4.3 ADJUSTMENTS

4.3.1 ADJUSTING MOTOR TURNING SPEED

The motor turning speed can be adjusted using the dials on the electronic component housing.

To increase or decrease the tapping speed (clockwise direction):

1- Turn the dial marked RIGHT to the left or right as required.
2- A value of 50 indicates 50% of rated speed.

To increase or decrease the tap release speed (anti-clockwise direction):

3- Turn the dial marked LEFT to the left or right as required.
4- A value of 50 indicates 50% of rated speed.

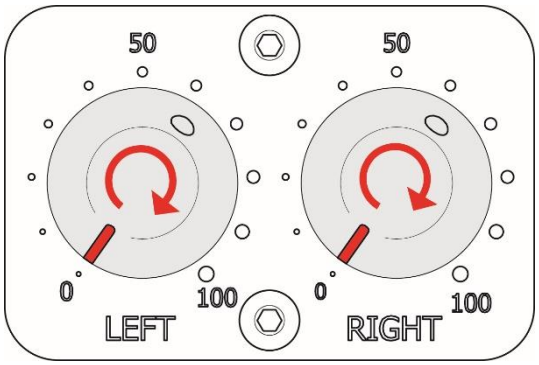

4.4 BALANCING THE ARM

Adjust the tension on the inner damper if the arm drops down or has too much upward force.

1- Keep the swing arm in an approximately horizontal position to facilitate operation.
2- Turn the knob provided for this purpose as required.

- **Anti-clockwise rotation:** more tension is applied to the spring
- **Clockwise rotation:** releases tension in the spring

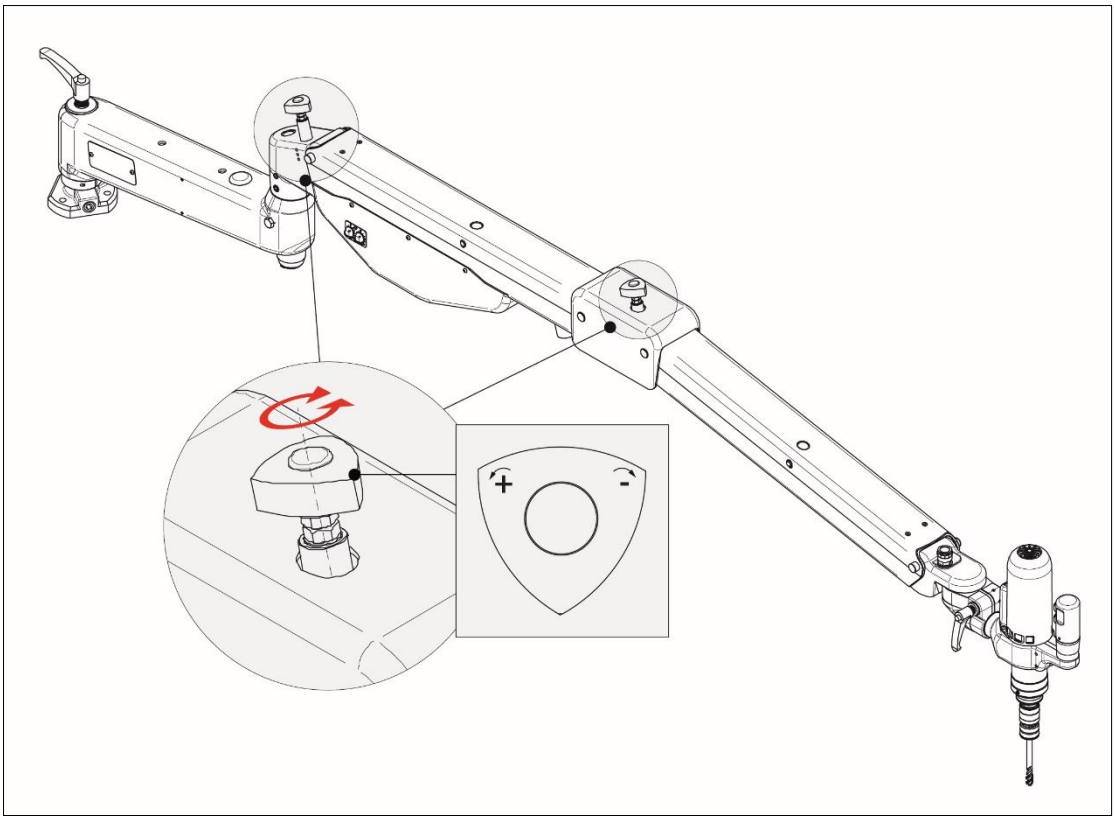

BALANCING THE ARM

✓ The arm must be balanced each time the module is changed

4.5 LUBRICATION

The oil pump and, therefore, the oil supply are activated simultaneously when the buttons that control the motor are pressed.

Lubrication time is measured in seconds and is adjusted using the potentiometer on the side of the cover (as shown in the diagram).

Lubrication time is adjusted as follows:

1. To increase the lubrication time, twist the potentiometer clockwise.
2. To decrease the lubrication time, twist the potentiometer anti-clockwise.

Vertical and RHM

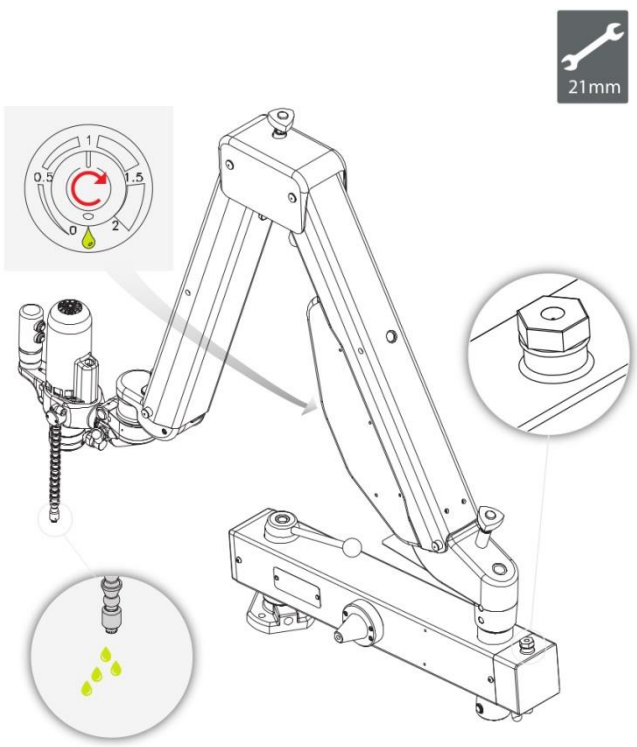

RHC

If the tank is empty, the pipes may fill with air. In this case, they must be bled after the tank is refilled.

1. Loosen the end (1) by rotating it 2 turns anticlockwise.
2. Increase the lubrication time to maximum and turn the motor several times until the pipes have been bled.
3. Tighten the end (1) by rotating it 2 turns clockwise.

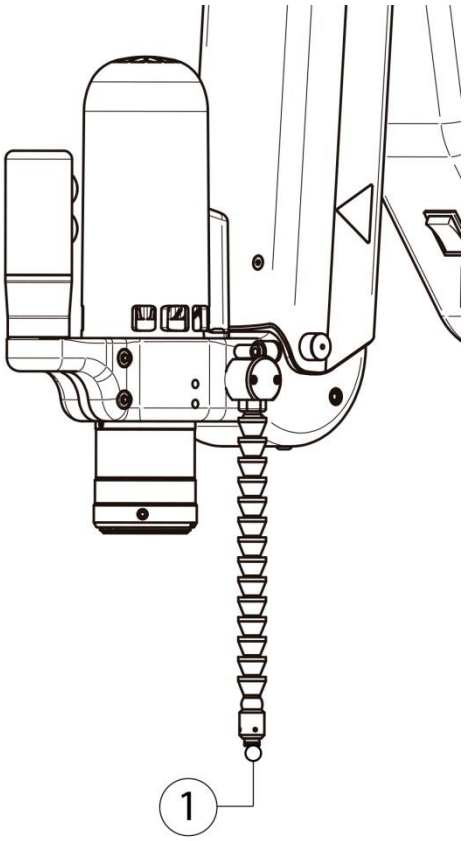

The tank filler cap is located either on top of the radial arm (Vertical and RHM) or on the end of it (RHC). To remove it, use a 21-mm spanner.

OIL SPECIFICATIONS

- ✓ Oil type: Viscosity of 20-40 cSt; EP (extreme pressure) additives (sulphur, phosphorus and inactive chlorides).
- ✓ ONLY USE PURE CUTTING OIL WITHOUT SOLVENTS. Certain types of trichlor or alcohol lubricants can seriously damage some system components.

MAINTENANCE

- ✓ Clean the oil tank regularly to remove metal shavings.

5 OPERATION

WARNING

- ✓ The sequence described below is for information purposes only and assumes the installation, adjustments such as balancing the arm and installing the module, gears (where applicable), tap holder (with or without clutch) and tap have been previously completed
- ✓ Use the required personal protective equipment described in *[See PERSONAL PROTECTIVE EQUIPMENT (PPE) p. 7]*
- ✓ Ensure the machine configuration is suitable for the characteristics of the tapping operation
- ✓ Ensure the necessary adjustments have been made to adapt the equipment to the characteristics of the work to be carried out
- ✓ Ensure the materials for tapping meet the requirements described in *[See TECHNICAL SPECIFICATIONS p. -14-]*
- ✓ The parts to be worked must be secured correctly
- ✓ Upon completion of the task or during periods of prolonged inactivity, set the machine to folded or parking position

5.1 VERTICAL AND VERTICAL LUBRICATION

Follow the steps below for a correct and safe sequence for the tapping operation

1- Position the machine close to the tapping position.
2- Position the head assembly.
3- Engage the lever on the base of the radial arm (for threads greater than M8).

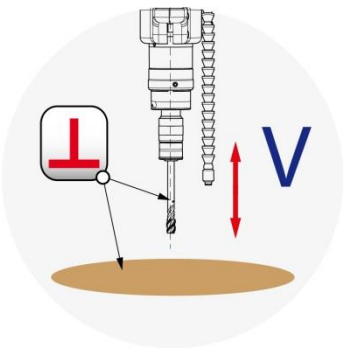

5.2 TAPPING

1- Switch on the main switch.
2- For tapping (clockwise rotation), hold down button [3] 1.
3- Hold button 2 to release the tap (turning to the left)
4- Move the machine to its folded or parking condition and switch off at the main switch

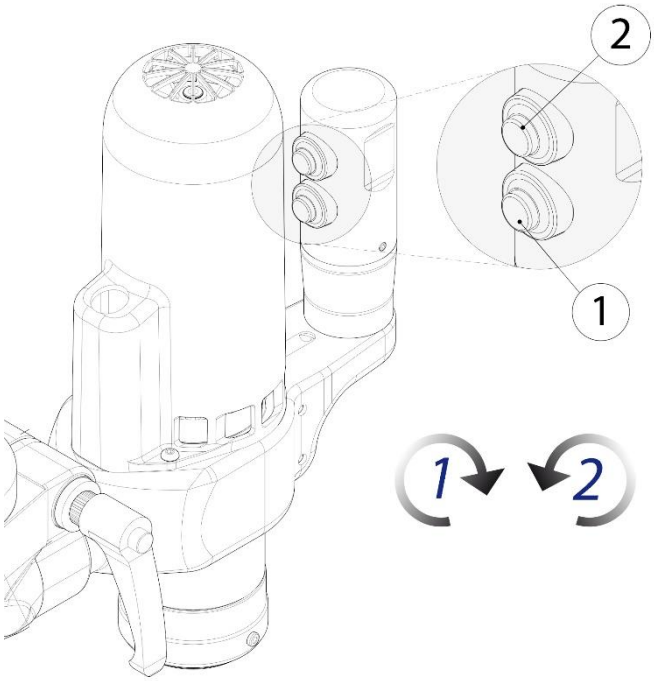

ⓘ INFORMATION

The machine incorporates a screen with a cycle counter.

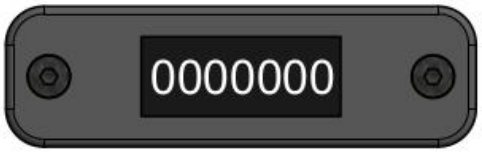

When you turn on the equipment, appears the total cycle counter.

Once you start to work, on the screen will appear a partial counter during the working session.

To view the total counter, you have to turn off the equipment, wait for 5 seconds and turn on the equipment again.

[3] Holding down buttons 1 and 2 prevents the machine operating without the intervention/supervision of an operator.

5.3 RHM / RHM LUBRICATION and RHC / RHC LUBRICATION

1- Radial arm (8) and arms (6 and 7) approximately aligned and perpendicular to the workpiece.
2- Arms (6 and 7) semi-extended with the probe in contact with the workpiece.

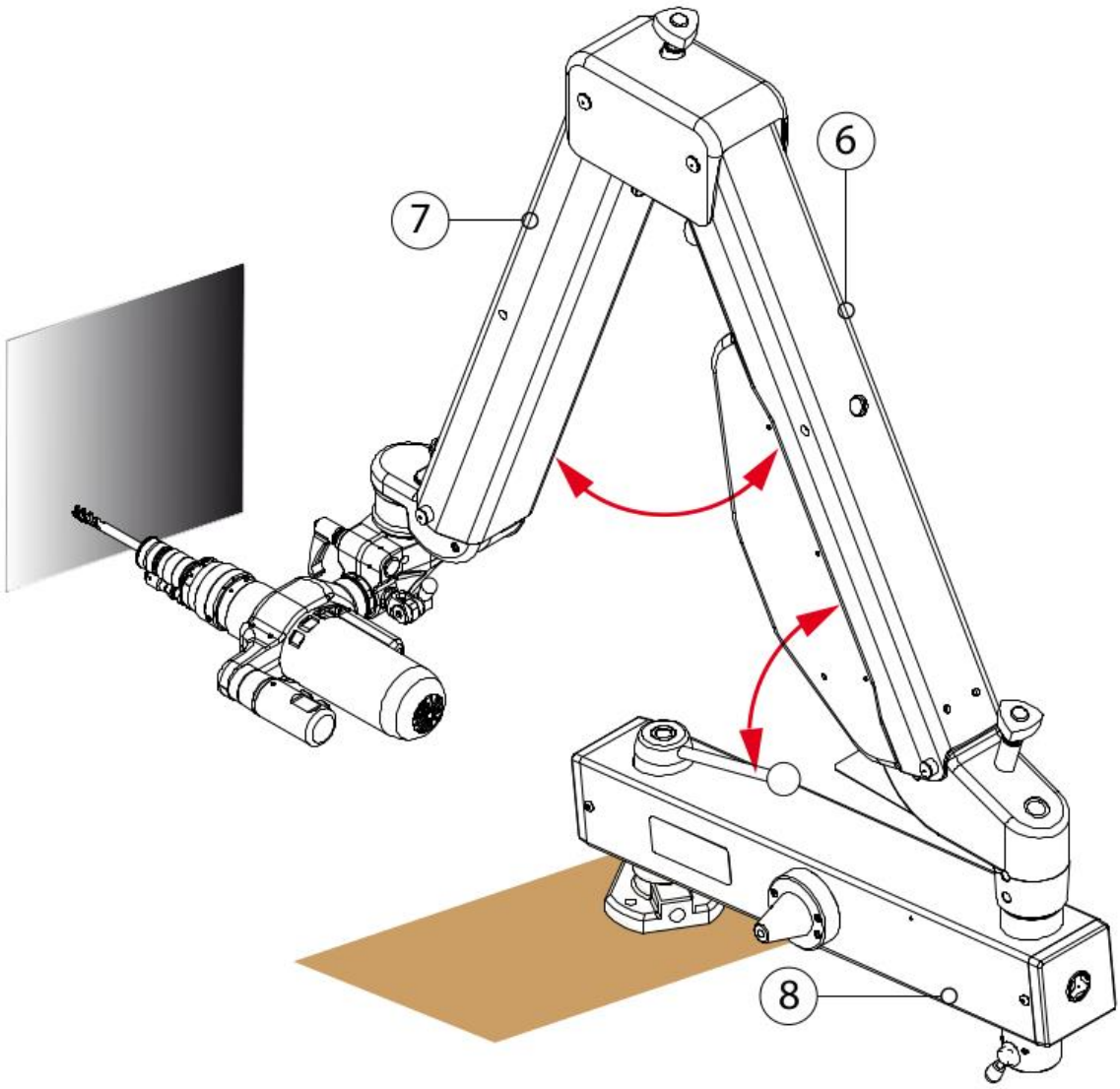

3- Insert the probe[4] (see figure A).

4- Position the machine.

5- Engage the levers according to the tapping operation to perform (vertical, horizontal or angled) *[see THREADING IN VERTICAL, HORIZONTAL AND ANGLED POSITION p. 25]*

ATTENTION! When engaging the locking lever (3), make sure the probe is fully perpendicular to the workpiece (see figure B).

6- Remove the probe and insert the screw tap (see figure C).

ATTENTION! The machine positions the screw tap vertically/horizontally. It is the operator's task to make sure that the screw tap and the workpiece are perpendicular.

7- Start tapping the workpiece *[see TAPPING p. 22].*

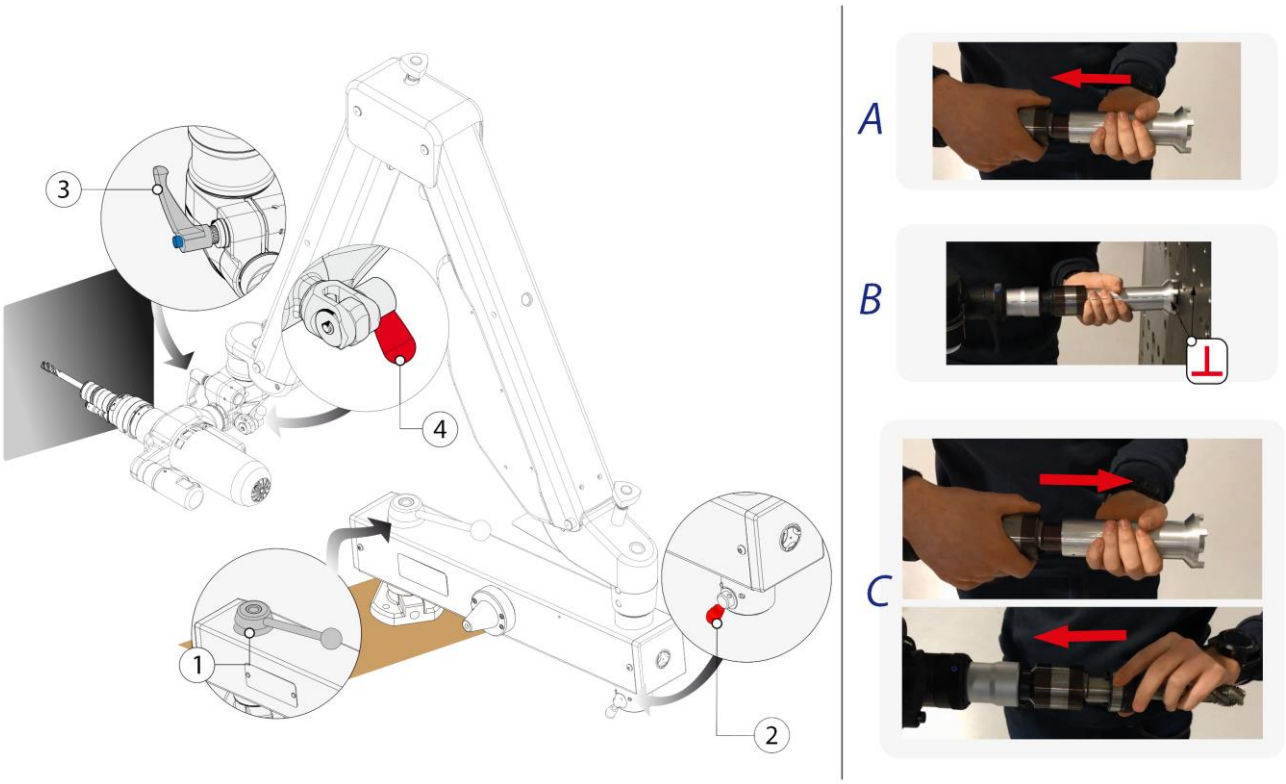

NOTE: The operations described (RHM) require certain skill and practice. For additional explanatory material, contact your ROSCAMAT® distributor.

[4] Two probes (sizes 19 and 31) are supplied with the RHC and RHC - LUBRICATION machines.

5.4 THREADING IN VERTICAL, HORIZONTAL AND ANGLED POSITION

The positions of the head assembly and the locking mechanisms (1. Base locking lever and 2. RHC arm locking lever, 3. Locking lever, 4. Positioner) depend on the working position (vertical, horizontal or angled), as shown in the following table:

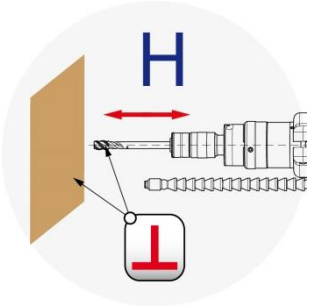

HORIZONTAL (H)

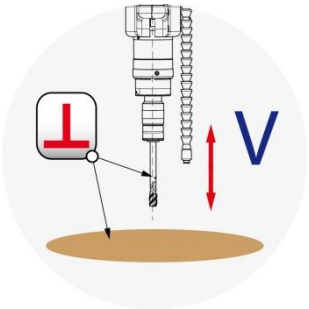

VERTICAL (V)

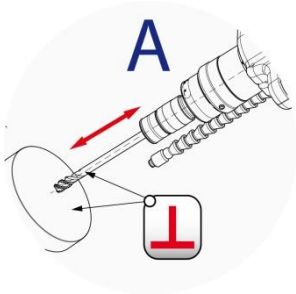

ANGLED (A)

	MACHINE		HEAD ASSEMBLY	
	BASE	RHC	LOCKING LEVER	POSITIONER
Type of tapping	(1)	(2)	(3)	(4)
VERTICAL (V) *(RHM / RHC)*	Brake applied*	Free	Locked	Locked
HORIZONTAL (H) *(RHM)*	Brake applied*		Free	Locked
ANGLED (A) *(RHM) Attention***	Brake applied*		Locked	Free
HORIZONTAL (H) *(RHC)*	Free	Locked	Locked	Locked
ANGLED (A) *(RHC)*	Free	Locked	Locked	Free

*** Threads greater than M8**
**** When performing angled tapping, the RHM model does not automatically keep the tapping head assembly perpendicular. Ensuring it is perpendicular is the operator's task**.

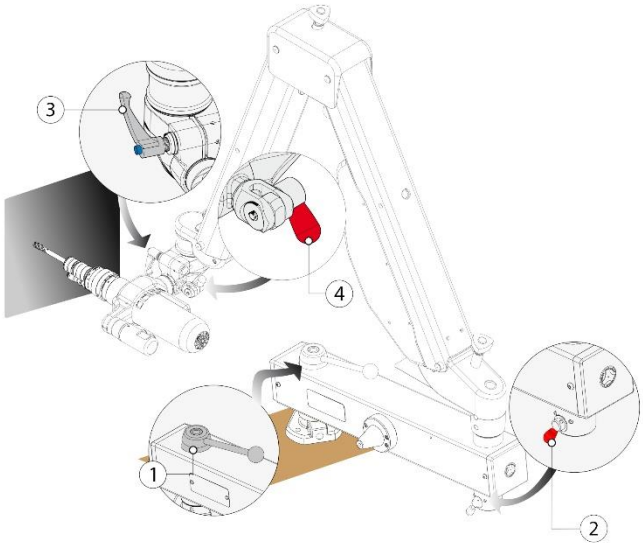

6 HEAD ASSEMBLIES

6.1 ARTICULATED HEAD ASSEMBLY

To leave the head free on its Z axis:

1- Release the locking lever
2- Turn the head on its Z axis (± 90°)
3- Lock the locking lever

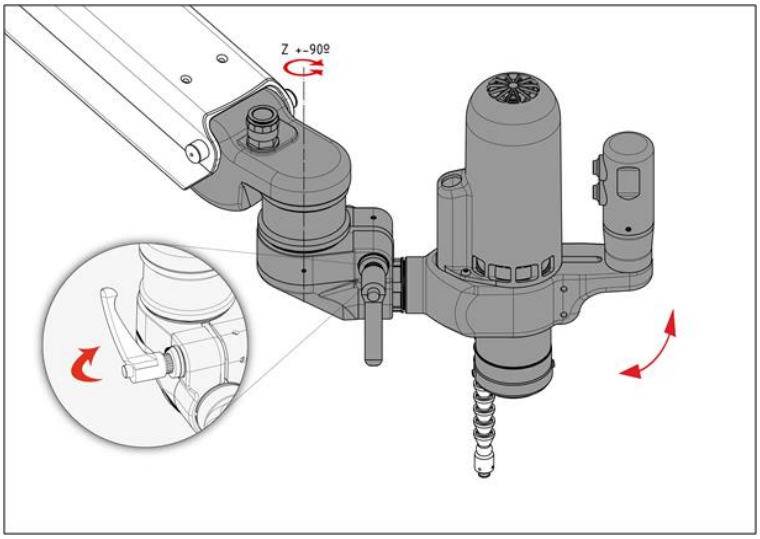

To leave the head free on its X axis:

1- Release the locking lever (1)
2- Rotate the positioner (2) in the direction shown.
3- Turn the head on its X axis (360°)
4- To lock the head in vertical (V) or horizontal (H) position:
Return the positioner (2) to its initial position (lower).
5- Lock the lever (1).

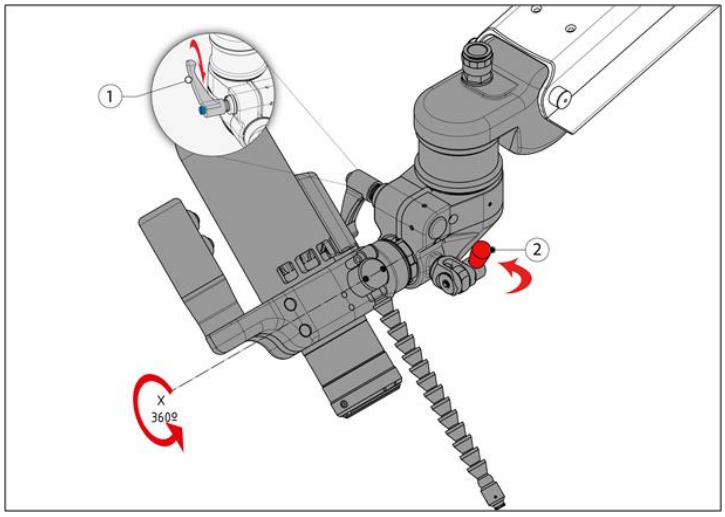

7 MAINTENANCE

7.1 REPLACING THE GAS SPRING

BEFORE REPLACING THE GAS SPRING

- ✓ The equipment must be correctly installed and set-up
- ✓ Switch off the equipment at the main switch and disconnect from the power supply
- ✓ It is recommended that two operators carry out this operation.

The process for replacing the rear arm spring is described below. Follow the same steps to replace the fore arm spring, taking care to remove the protective housing at the joint of the two swing arms.

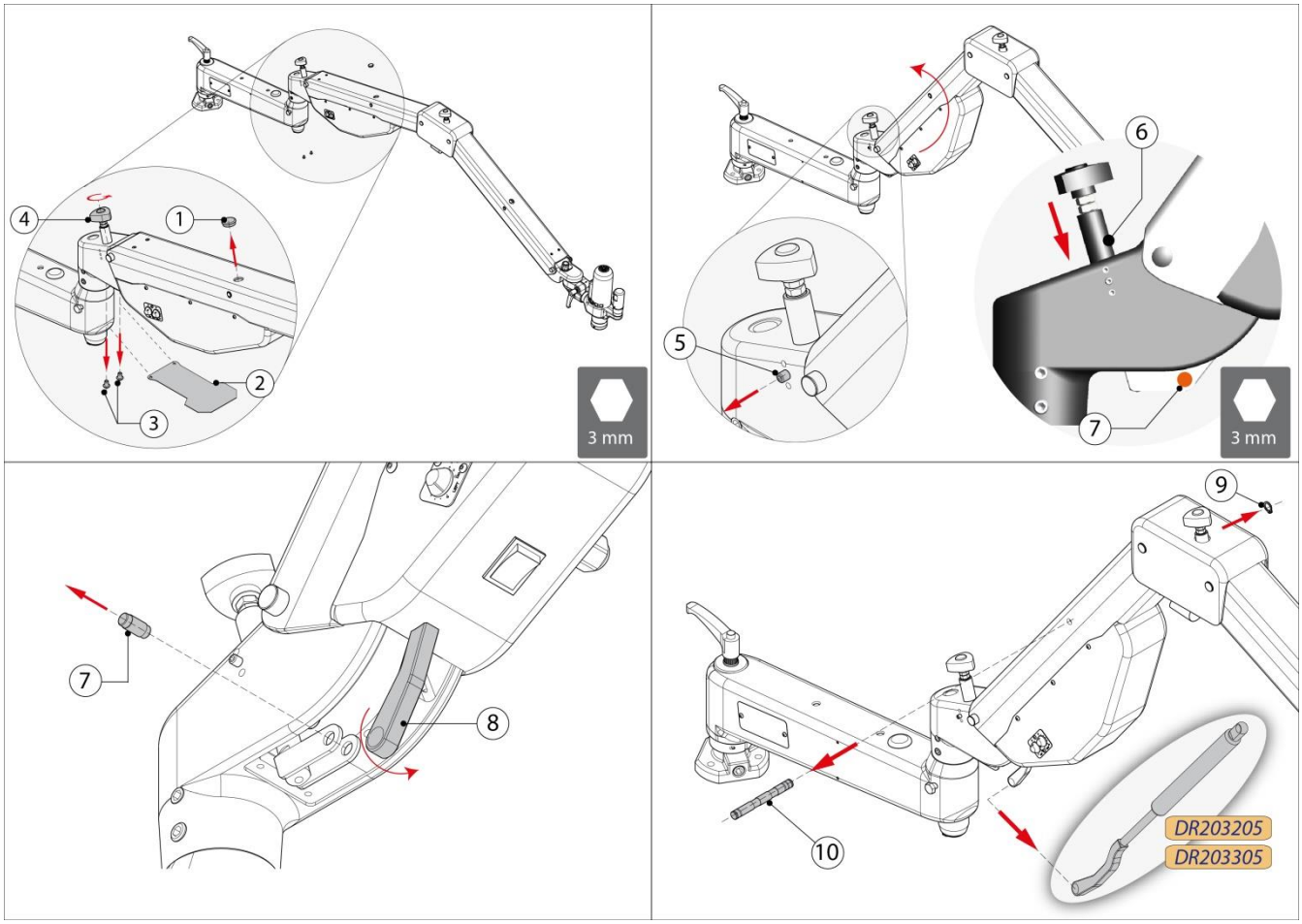

1- Remove the plug (1), the protective cover (2), the bolts that hold it in place (3) *(3 mm Allen key).* Release any tension from the gas spring by moving the arm to its horizontal position and turning the adjustment knob (4) in an anti-clockwise direction.

2- Loosen the stud (5) and lift the arm as high as possible, holding it in this position. The regulation piece (6) will fall slightly, leaving the peg (7) visible through the lower part of the cross.

3- Remove the peg (7) in the direction shown. The bottom end of the spring (8) will drop. Support it as it falls.

4- Remove the retainer ring (9) and then remove the shaft (10), holding the bottom end of the spring at the same time (8). Immediately remove the spring following the direction shown and replace with a new one ***DR203205 (rear arm) / DR203305 (fore arm).***

Pay special attention to the position of the spring in the slot in the arm shaft, which must be fitted as shown below.

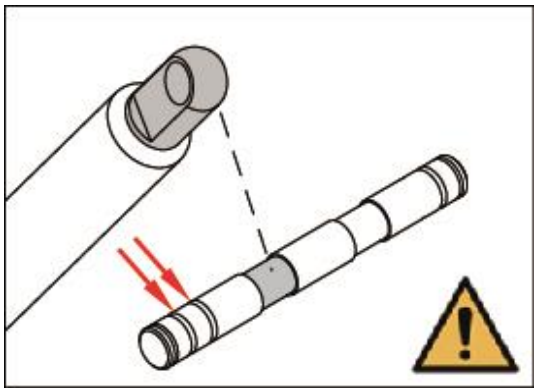

Assembly position for the rear arm spring

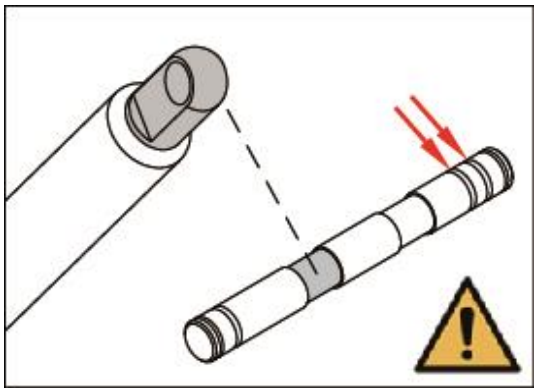

Assembly position for the fore arm spring

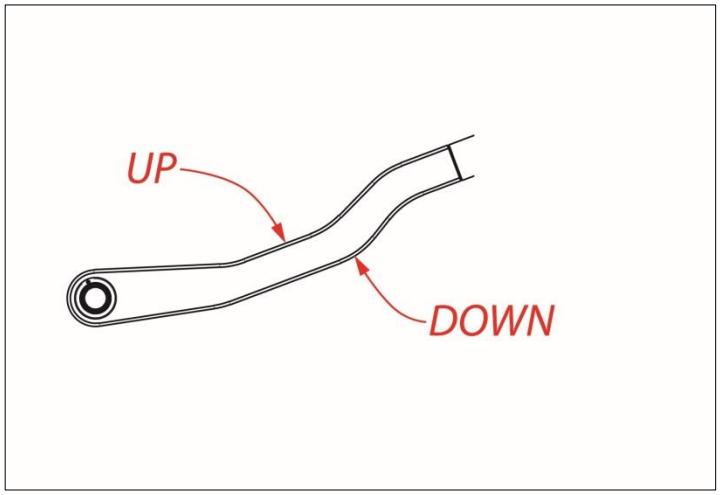

7.2 REPLACING THE GRIP AND BUTTONS

BEFORE REPLACING THE GRIP

- ✓ The equipment must be correctly installed and set-up.
- ✓ Switch off the equipment at the main switch and disconnect from the power supply.

1- Set the machine to the folded or parking position.
2- Switch off at the main switch and unplug from the power supply.
3- Remove the motor control buttons (2) and disconnect them from their FASTON connector *(use a small screwdriver to lift out the buttons).*
4- Remove the bolt (3) (2-mm Allen key) and slide the grip (1) upwards as show in the diagram.
5- For assembly, follow the procedure in reverse, making sure none of the cables are trapped.

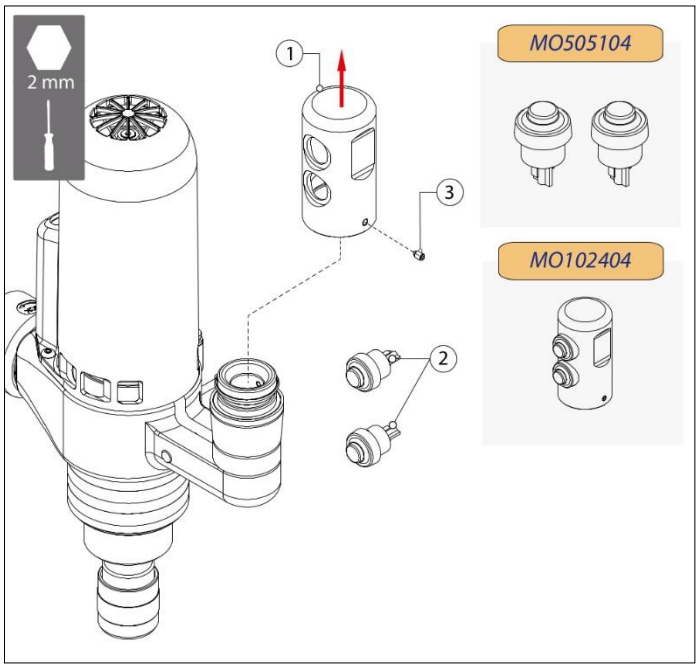

7.3 REPLACING THE OIL PUMP

ONLY FOR MACHINES FITTED WITH THIS DEVICE

BEFORE REPLACING THE OIL PUMP

- ✓ The equipment must be correctly installed and set-up.
- ✓ Switch off the equipment at the main switch and disconnect from the power supply.

1. Remove the 6 bolts (1) (2.5-mm Allen key) from the cover of the lubrication system (2) located on the rear swing arm and remove the cover.
2. Disconnect the switch cables and potentiometers.
3. Disconnect the two FASTON terminals and the oil pump inlet and outlet tubes.
4. Loosen the 2 bolts (3) (2.5-mm Allen key) that hold the oil pump (4) in place and replace the pump.
5. For assembly, follow the procedure in reverse.

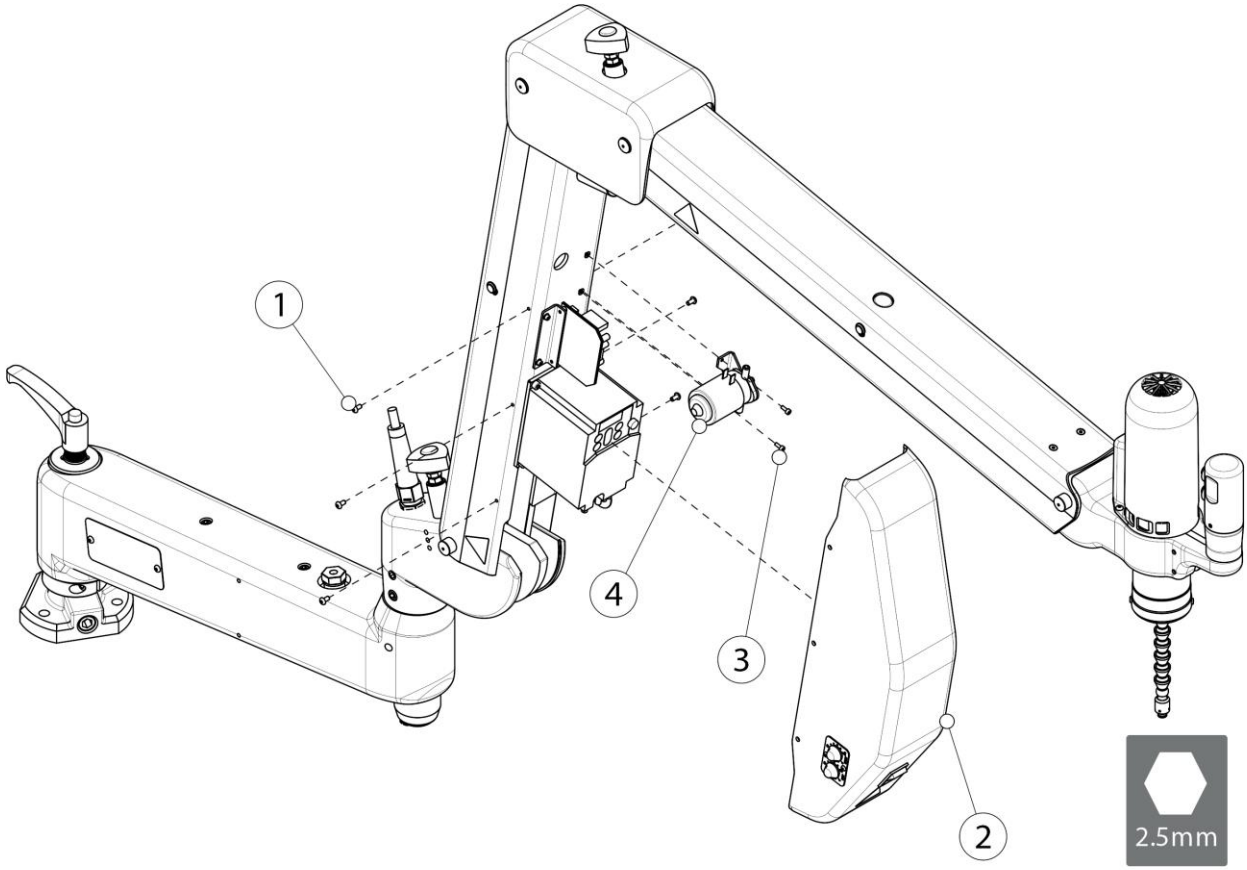

7.4 REPLACING THE VARIABLE-SPEED DRIVE

BEFORE REPLACING THE VARIABLE-SPEED DRIVE

- ✓ The equipment must be correctly installed and set-up
- ✓ Switch off the equipment at the main switch and disconnect from the power supply

1. Remove the 4 bolts (1) (2.5-mm Allen key) from the cover of the electrical box (2) located on the rear swing arm and remove the cover.
2. Disconnect the switch cables and potentiometers.
3. Remove the top cover protecting the variator connections.
4. Disconnect the variator connection board.
5. Remove the variator side protection.
6. Disconnect the remaining cables.
7. Remove the 4 bolts (3) (4-mm Allen key) attaching the variable-speed drive (4) to the rear swing arm and remove the drive.
8. Attach the new variable-speed drive and connect all the cables to their corresponding connections *[see* ELECTRICAL DIAGRAM *p.34].*
9. Finally, replace the rear swing arm cover.

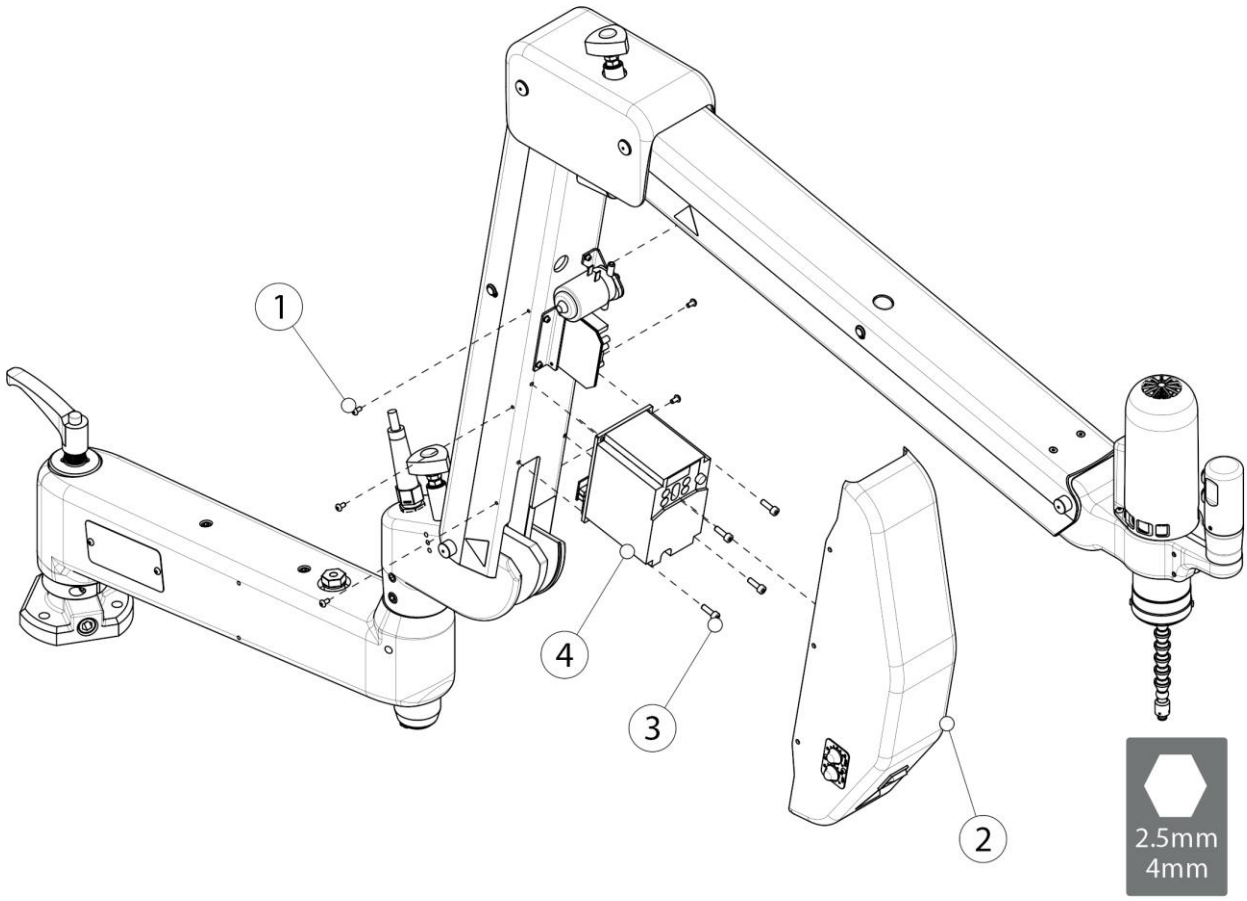

7.5 ADJUSTING THE CLUTCH

1. Remove the locking ring.
2. Turn the slotted nut clockwise to increase clutch tension and anticlockwise to decrease it.
3. Re-insert the ring in the slot.

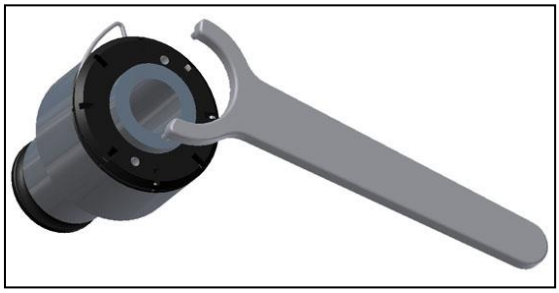

7.6 REPLACING THE MOTOR

BEFORE REPLACING THE MOTOR

- ✓ The equipment must be correctly installed and set-up.
- ✓ Switch off the equipment at the main switch and disconnect from the power supply.

1- Set the machine to the folded or parking position.
2- Switch off at the main switch and unplug from the power supply.
3- Remove the Seeger ring (1) and remove the chuck (2).
4- Remove the bolts (3) *(2.5-mm Allen key).*
5- Slide the housing (4) up until the connector (5) is visible. Disconnect the connector as shown in the diagram and fully remove the housing (4).
6- Disconnect the earth connection (6) *(2.5-mm Allen key).*
7- Remove the plug and loosen the bolt (7) (5-mm Allen key).
8- Loosen the studs (8) *(3-mm Allen key).*
9- Remove the motor (9) and replace if necessary.
10- Reverse the process for assembly.

NOTE: When assembling the motor, make sure none of the cables are trapped.

PLEASE NOTE

- ✓ Take care not to lose the Ø7-mm ball bearings inside the chuck.

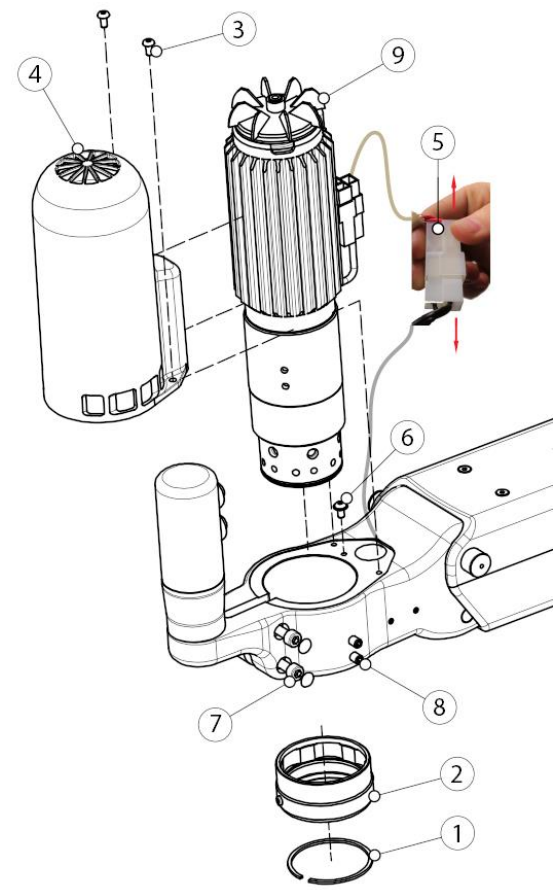

8 ELECTRICAL DIAGRAM

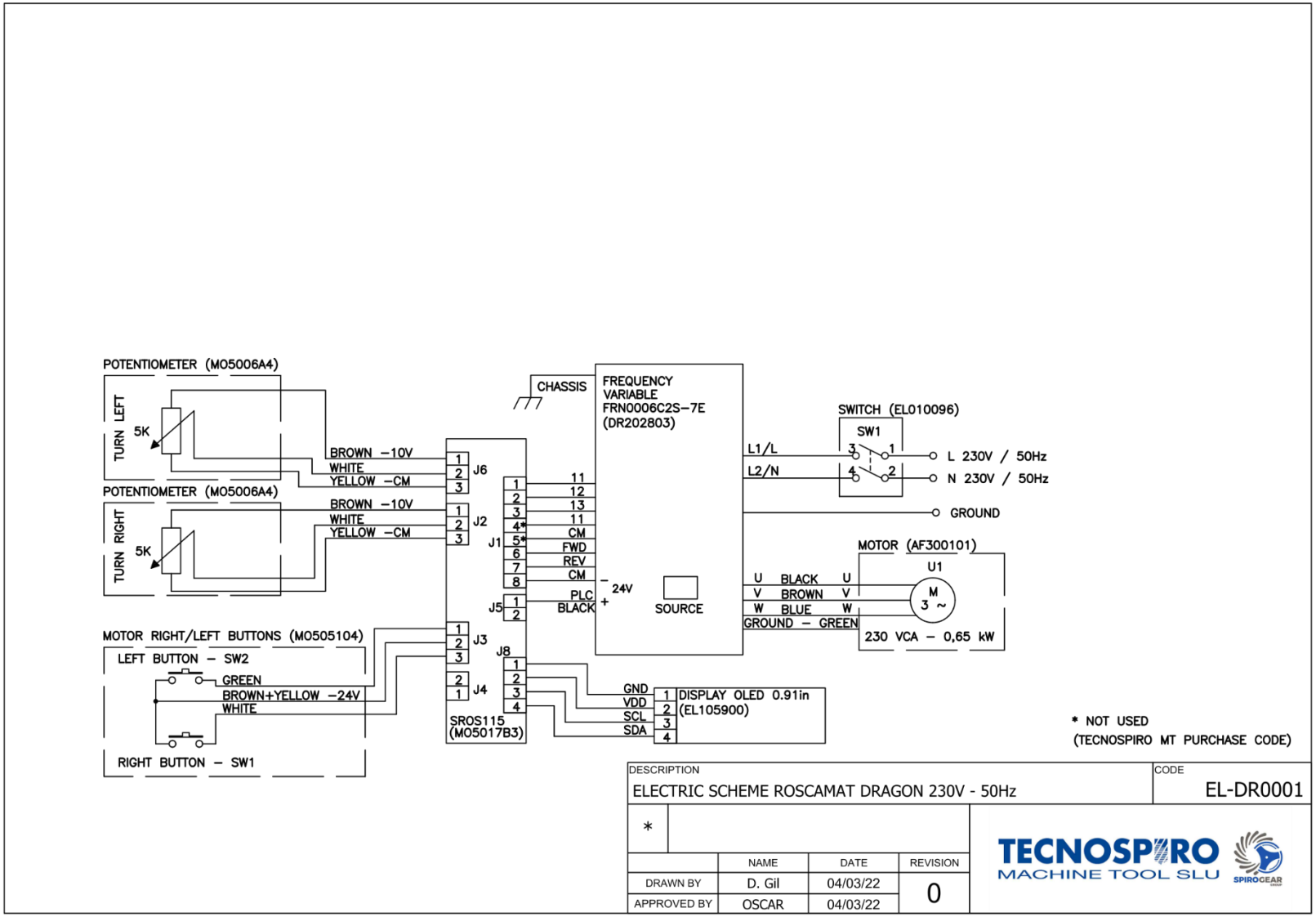

Electrical diagram, configurations WITHOUT lubrication – 230V

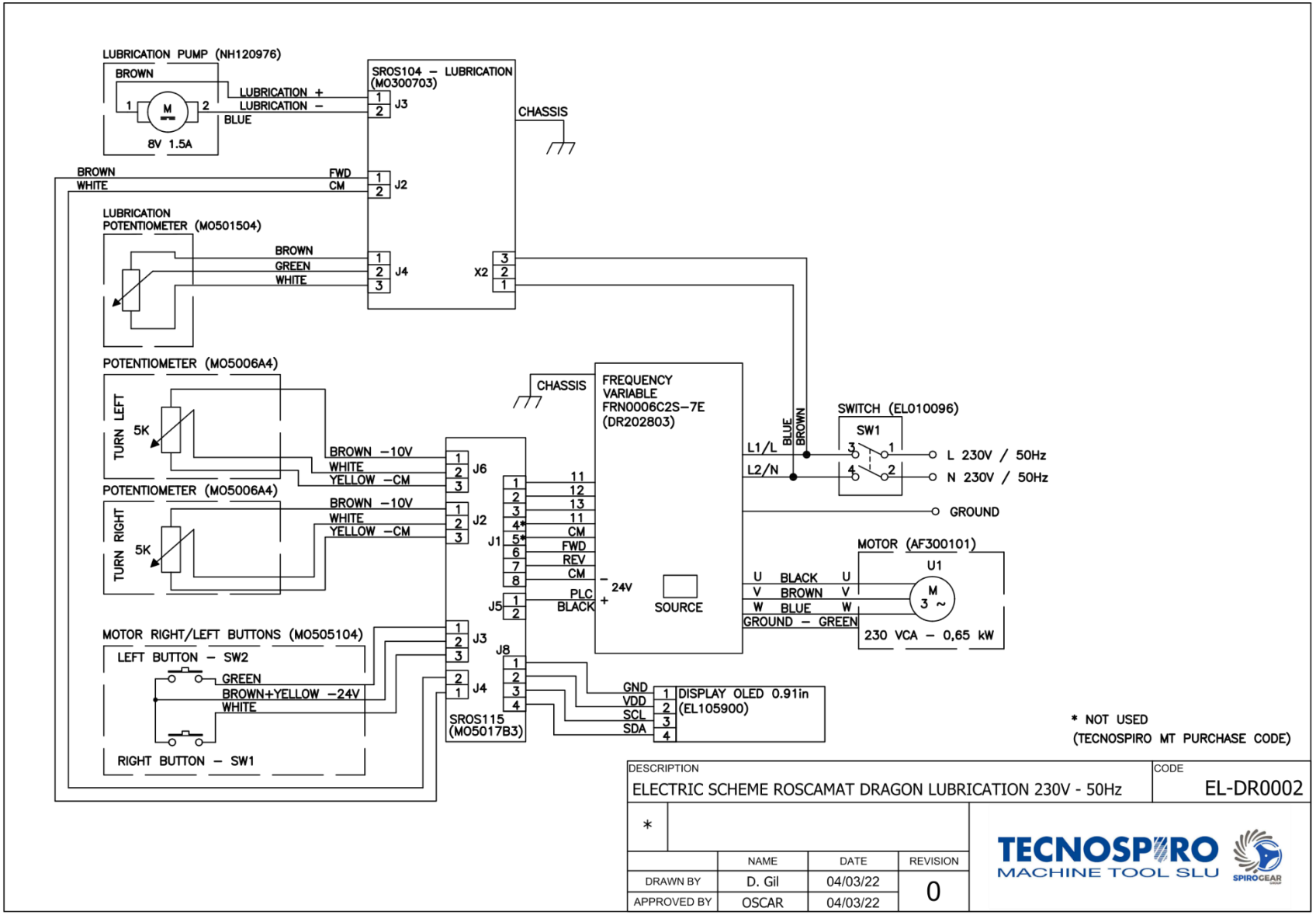

Electrical diagram, configurations WITH lubrication – 230V

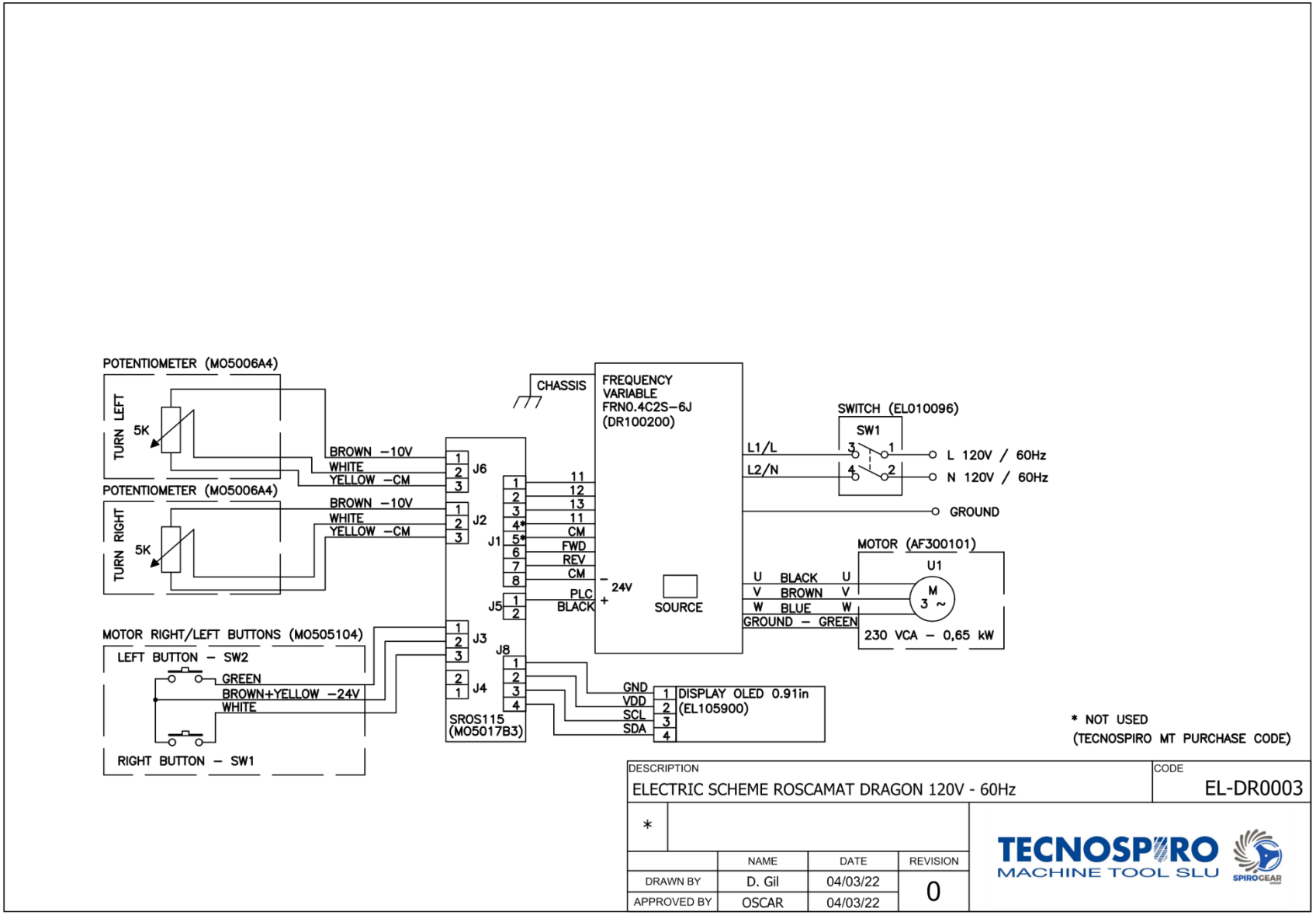

Electrical diagram, configurations WITHOUT lubrication – 120V

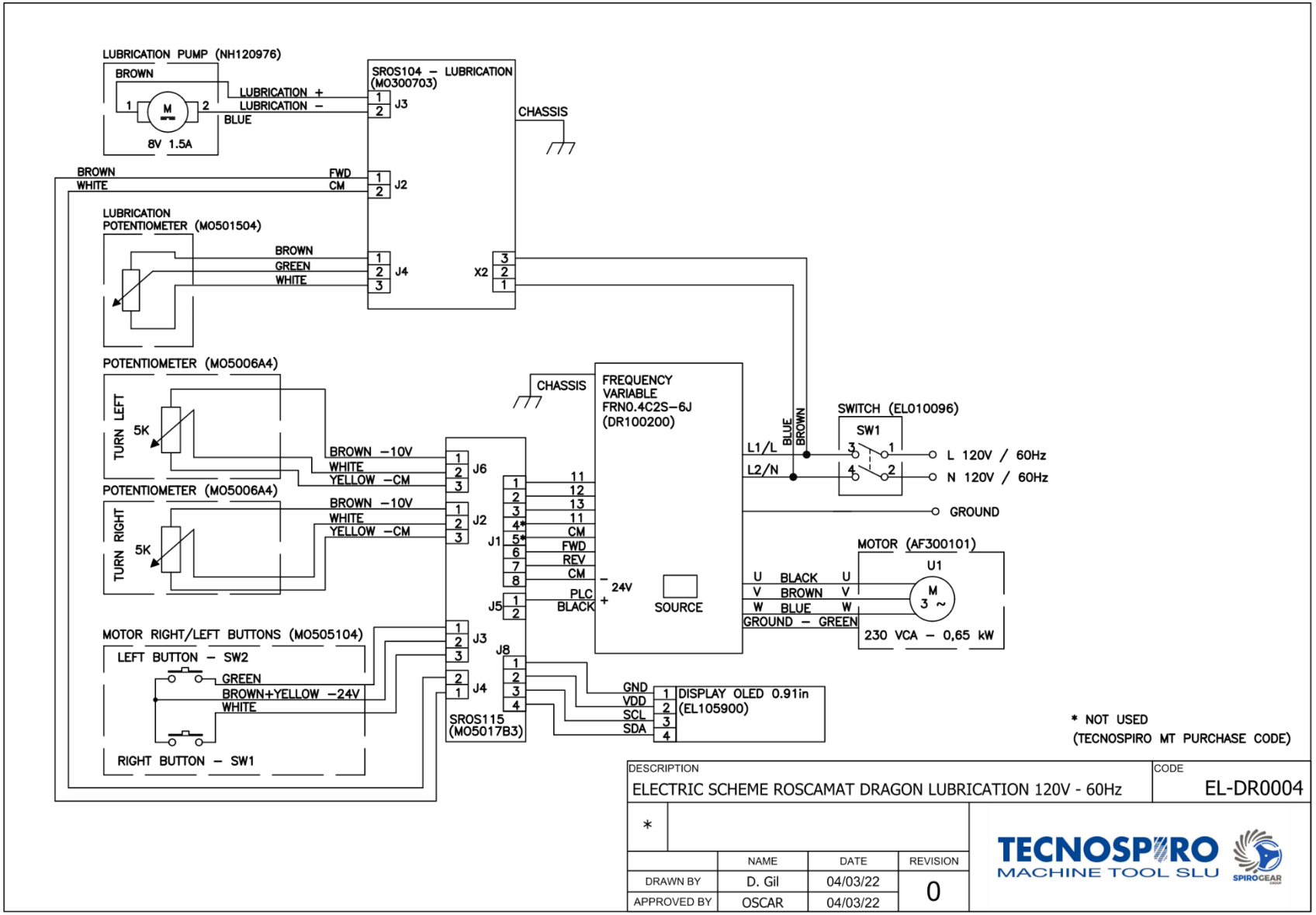

Electrical diagram, configurations WITH lubrication – 120V

9 TROUBLESHOOTING

9.1 ISSUE: THE MACHINE DOES NOT WORK - THE MOTOR WILL NOT START OR HAS STOPPED

Remove the electrical housing, leaving the electrical equipment uncovered and **read the fault shown on the drive display:**

Nominal dimensions			Technical Specifications
indicator	Emergency stop		**Stop cause indicator**
		Overcurrent protection	OC 1: Overcurrent during acceleration
			OC2: Overcurrent during deceleration
			OC 3: Overcurrent during operation at constant rpm
		Network phase fault protection	L in: Entry phase fault
		Insufficient voltage protection	LU: Insufficient voltage
		Exit phase fault protection	OPL: Loss of output phase; problems in output cables of variator.
		Overvoltage protection	OU1: Overvoltage during acceleration
			OU2: Overvoltage during deceleration
			OU3: Overvoltage during constant revolutions operation
		Protection against overheating	OH1: Excess temperature on heat sink; excess load or fault.
			dbH: DB circuit overheating
		External fault entry	OH2: External faults
		Motor protection	OH4: Motor protection (PTC resistance)
			OL1: Motor overload; electrothermal motor protection relay.
		Overload protection	OLU: Variator overload
		Safety stop	Er1: Memory fault
			Er2: External control panel communications fault
			Er3: CPU fault
			Er6: Operational sequence fault
			Er8: RS485 communications fault
			ErF: Memorisation fault due to insufficient voltage
	Operation, safety stop		Data from the last four faults are memorised and can be displayed. Data stays memorised upon disconnecting the power

In any event, the machine must be reset to restart process. Switch the machine off and wait about 25 seconds before turning on the equipment. If the problem is due to an external current or voltage fault, please wait until the current is stabilised. If the problem persists, contact your distributor or manufacturer.

9.2 ISSUE: TILTING ARM FALLS

Possible causes		Solution
1.- Arm not balanced	=	Balance the arm according to the weight to be supported. *[See BALANCING THE ARM page 18]*
2.- Defective damper	=	Replace with a new one *[See* REPLACING THE GAS SPRING *page27]*

9.3 PROBLEM: THE CLUTCH SLIPS AND THE TAP FAILS TO TURN WHILE THE MOTOR IS RUNNING

Possible causes		Solution
1.- Clutch loose	=	Adjust the clutch *[See* ADJUSTING THE CLUTCH *p.32].*
2.- Insufficient tool lubrication	=	Use a suitable oil or emulsion for the material.
3.- Tap not suited to the material	=	Use taps according to the material, following the manufacturer's instructions
4.- Tap in poor state (blunt)		
5.- Hole misaligned		
6.- Small hole diameter		

9.4 PROBLEM: THE LUBRICATION SYSTEM DOES NOT WORK

Possible causes		Solution
1. - Oil tank empty	=	Fill tank *[See* LUBRICATION *p.19].*
2.- Grease stem blocked	=	Unscrew the end of the nozzle and clean it. (Please note: do not lose the spring and ball found inside the nozzle).

10 WARRANTY

See attached warranty document.

11 SPARE PARTS

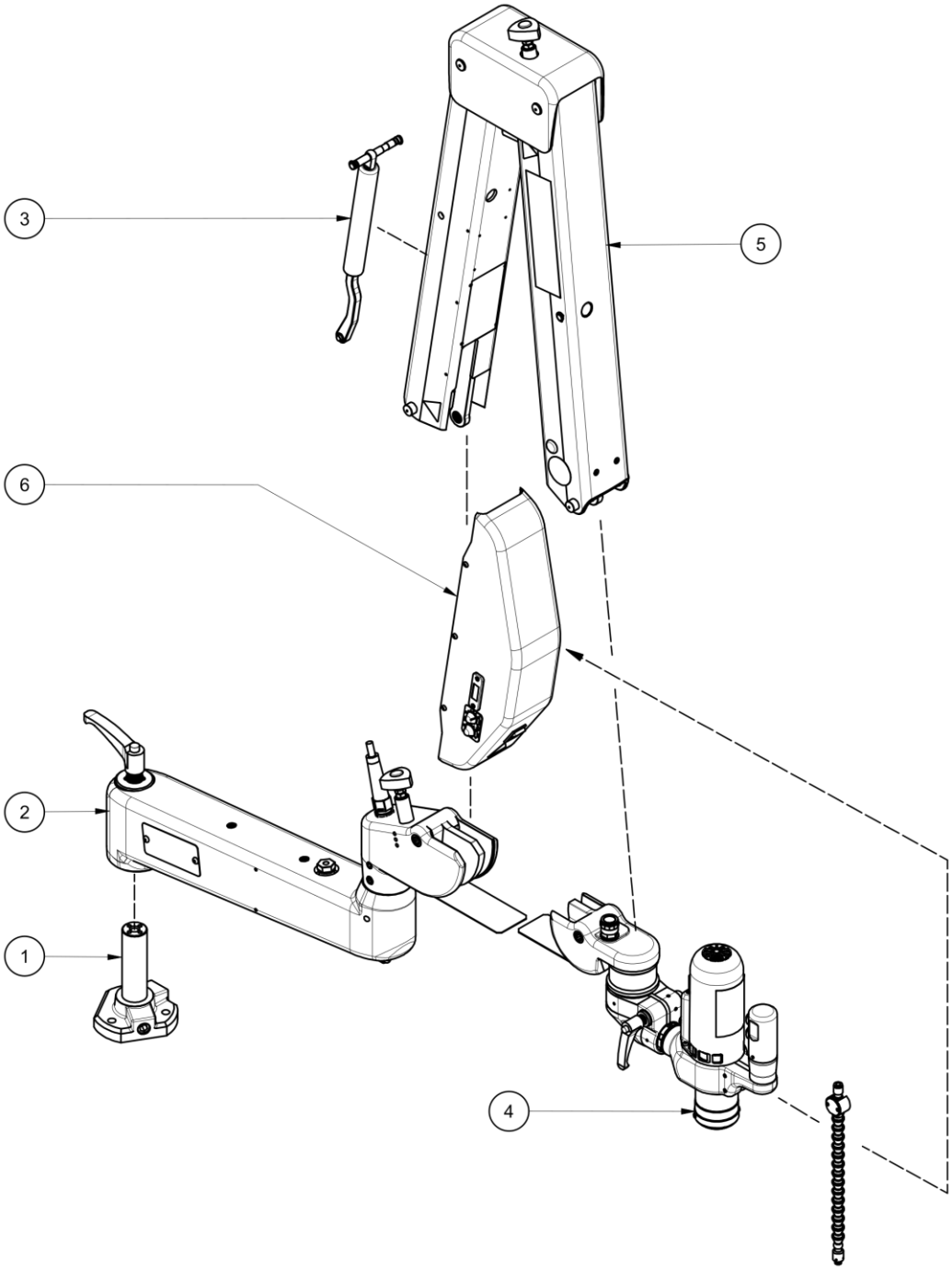

DRAGON MODEL V / MODEL RHM / MODEL RHC	
POS	DESCRIPTION
1	BASE
2	RADIAL ARM
3	DAMPER
4	HEADMEMBER
5	ARM
6	LUBRICATION / CONTROL

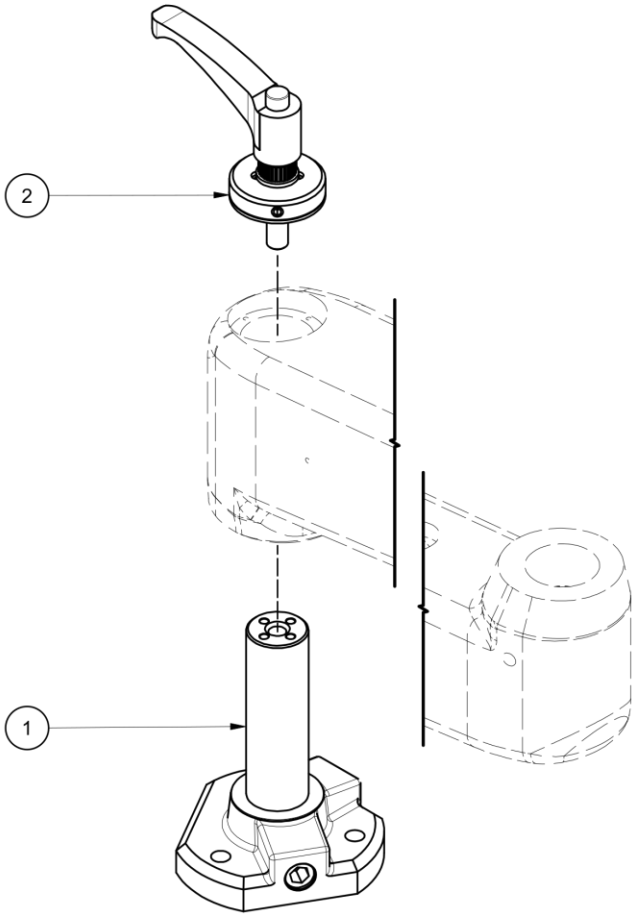

BASE			
POS	CODE	DESCRIPTION	MODEL
1	DR101005R	BASE	V / RHM
2	MV3034A5R	BASE BRAKE HANDLE + PAD	V / RHM

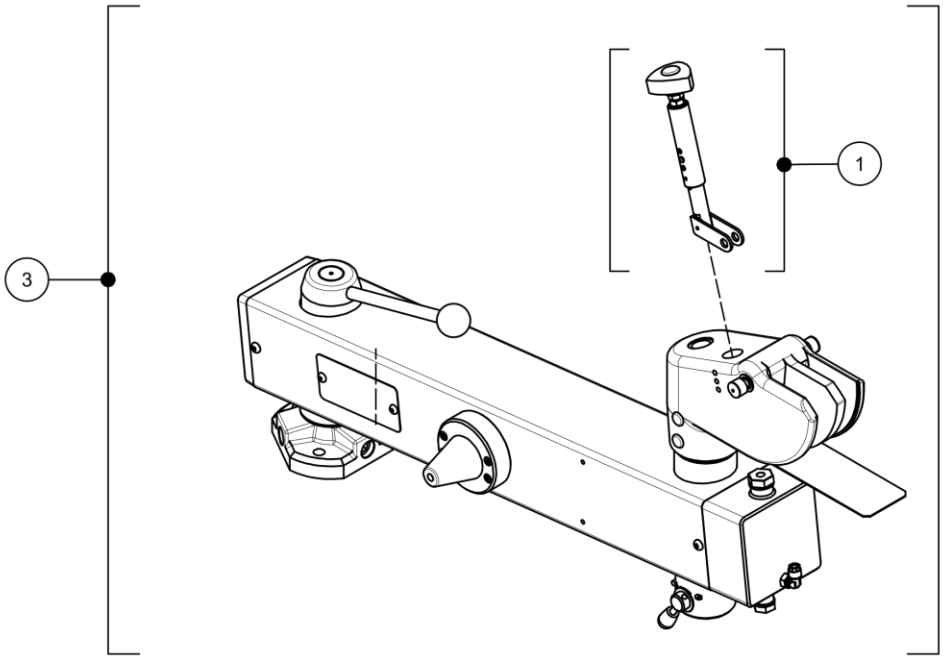

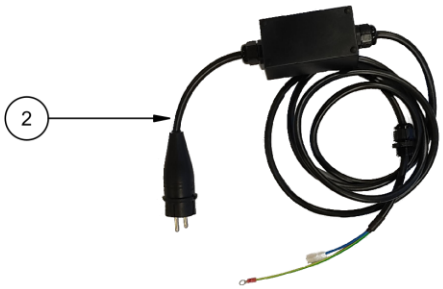

RADIAL ARM MODEL RHC			
POS	CODE	DESCRIPTION	MODEL
1	DR100405R	REAR DAMPER REGULATING FORK	V / RHM / RHC
2	DR101903	CONNECTION WIRE	V / RHM / RHC
3	DR101700R	RADIAL ARM ASSEMBLY	RHC

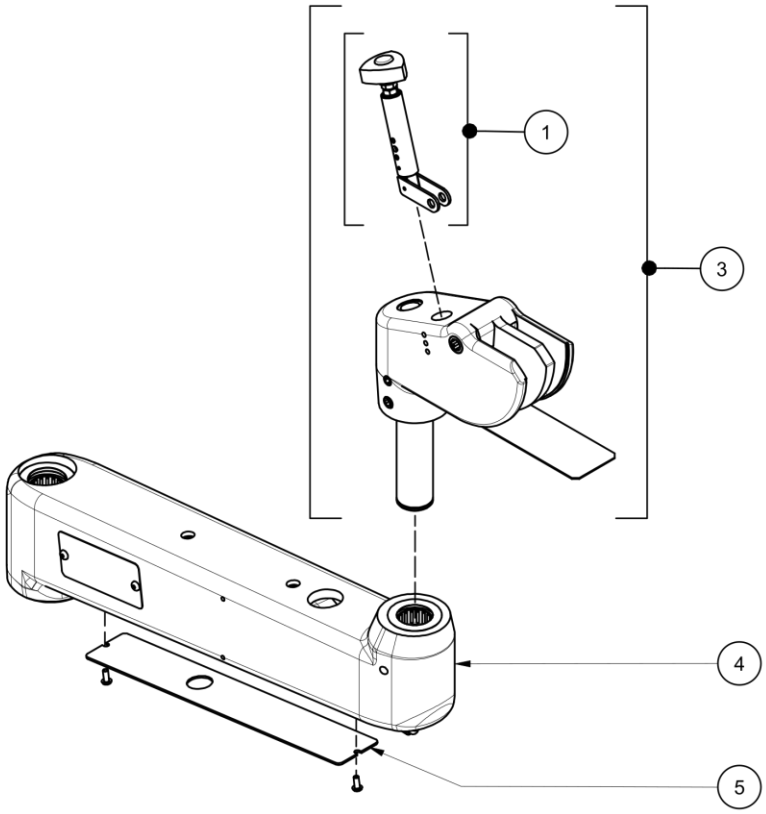

RADIAL ARM MODEL RHM / MODEL V			
POS	CODE	DESCRIPTION	MODEL
1	DR100405R	REAR DAMPER REGULATING FORK	V / RHM
2	DR101903	CONNECTION WIRE	V / RHM / RHC
3	DR100105R	CROSS UNIT - ARM CONNECTION UNION	V / RHM
4	DR101205R	RADIAL ARM ASSEMBLY	V / RHM
5	90100803	LOWER COVER RADIAL ARM	V / RHM

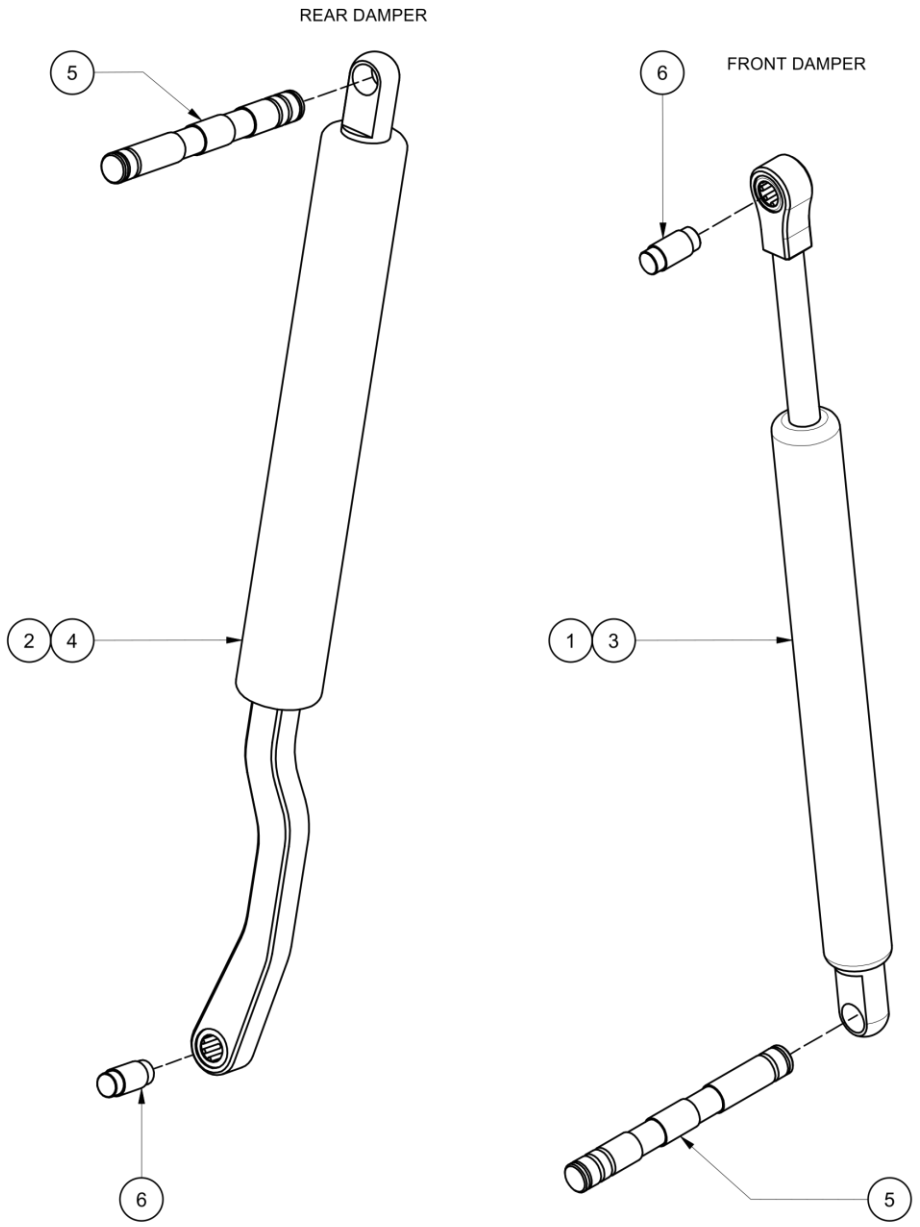

DAMPER			
POS	CODE	DESCRIPTION	MODEL
1	DR102000	FRONT DAMPER	V
2	DR102200	REAR DAMPER	V
3	DR102100	FRONT DAMPER	RHM / RHC
4	DR102300	REAR DAMPER	RHM / RHC
5	DR2014A3	SPINDEL OF THE DAMPER, AT THE ARM	V / RHM / RHC
6	MV400503	DAMPER SHAFT	V / RHM / RHC

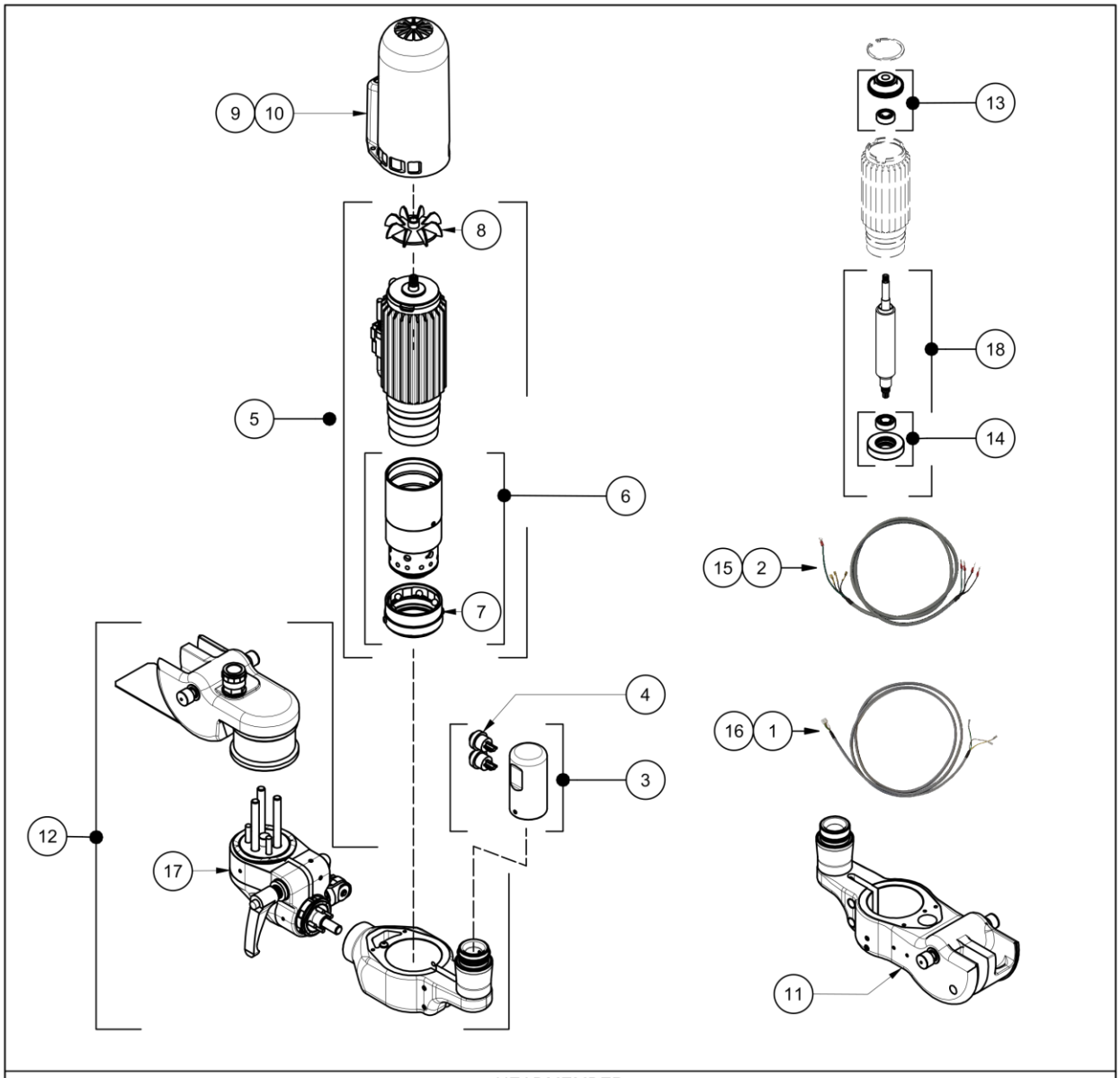

HEADMEMBER			
POS	CODE	DESCRIPTION	MODEL
1	DR202303	GRIP TO VARIATOR WIRE	RHM / RHC
2	DR202403	MOTOR TO VARIATOR WIRE	RHM / RHC
3	MO102404	MOTOR GRIP	V / RHM / RHC
4	MO505104	PUSH BUTTON (MOTOR GRIP) - KIT 2 UNIT	V / RHM / RHC
5	AF300101R	ELECTRIC MOTOR- HIGH FREQUENCY AF3	V / RHM / RHC
6	TG108000	GEARBOX + MOTOR SLIDER - MODULE SUPPORT FIXATION	V / RHM / RHC
7	402012A5R	MOTOR SLIDER - MODULE SUPPORT FIXATION	V / RHM / RHC
8	AF211003	MOTOR COOLING FAN	V / RHM / RHC
9	DR301603	MOTOR EXT. COVER ROSCAMAT-DRAGON	V
10	DR301703	MOTOR EXT. COVER ROSCAMAT-DRAGON	RHM / RHC
11	DR300504R	VERTICAL MOTOR HEAD	V
12	DR300104R	MULTIPOSITION HEAD	RHM / RHC
13	TG108100	MOTOR BEARING - UPPER COVER 6000 ZZ C3	V / RHM / RHC
14	MO106700	MOTOR BEARING - BOTTOM COVER 6001 ZZ C3	V / RHM / RHC
15	DR203703	MOTOR TO VARIATOR WIRE	V
16	DR203603	GRIP TO VARIATOR WIRE	V
17	DR3010A5R	SUMP OF MULTIPOSITION HEAD	RHM / RHC
18	AF300104	BODY ROTOR AF3	V / RHM / RHC

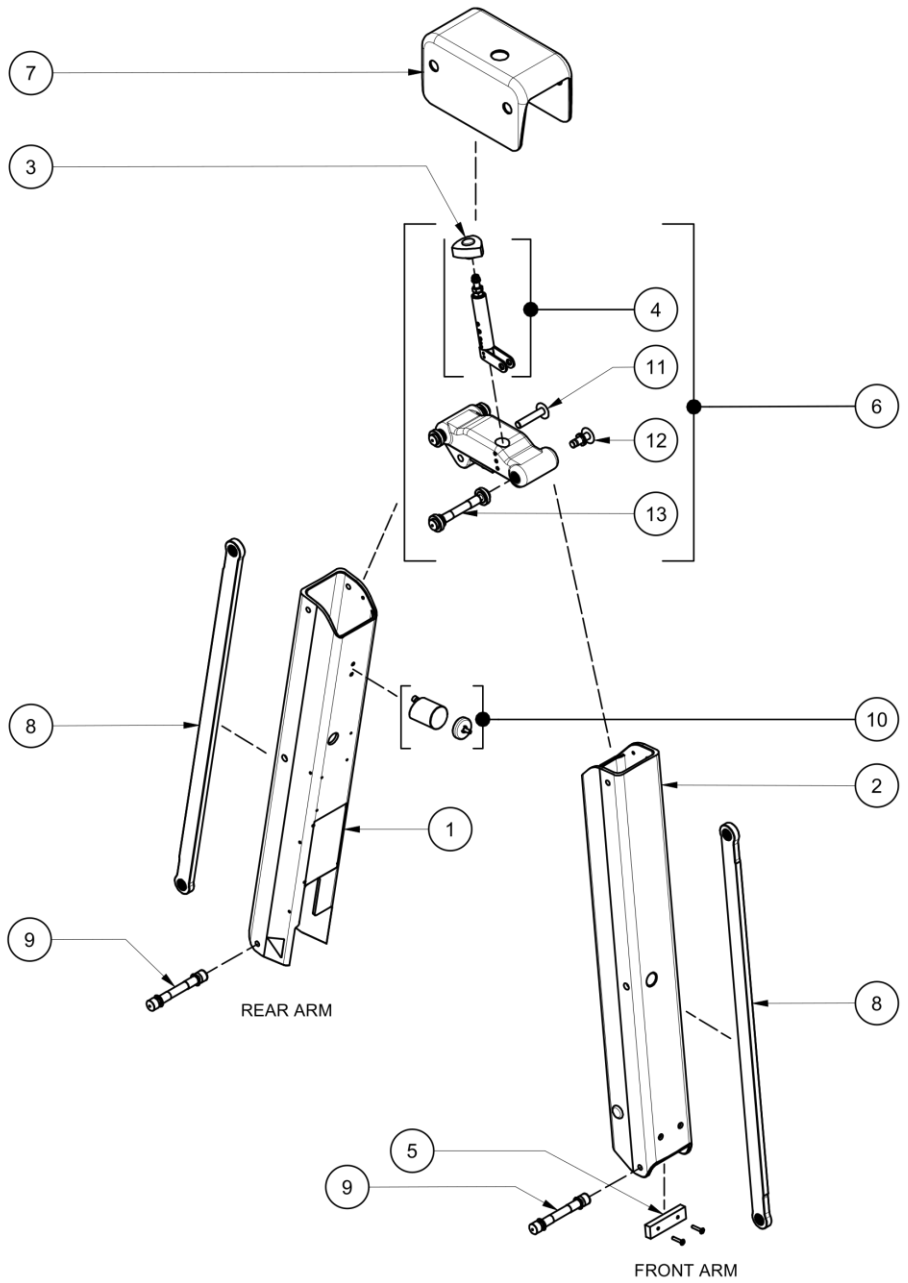

ARMS			
POS	CODE	DESCRIPTION	MODEL
1	DR202504R	REAR ARM	V / RHM / RHC
2	DR202604R	FRONT ARM	V / RHM / RHC
3	AC020056	DAMPER REGULATING HANDWHEEL	V / RHM / RHC
4	DR200305R	FRONT DAMPER REGULATING FORK	V / RHM / RHC
5	DR201703	ARM ABUTMENTS	V / RHM / RHC
6	DR200105R	UPPER SUPPORT WITH REGULATING FORK	V / RHM / RHC
7	DR201003	UPPER HAT	V / RHM / RHC
8	DR203105R	STAY	V / RHM / RHC
9	TG102500R	SPINDLE ARM WITH SCREWS	V / RHM / RHC
10	DR103400	MAGNET PARKING	V / RHM / RHC
11	DR103600	SUBMARINE GUN SHAFT SPARE	V / RHM / RHC
12	DR103700	SUBMARINE TIGHT SHAFT SPARE	V / RHM / RHC
13	DR103500	SPINDLE ARM WITH SCREWS - UPPER SUPPORT	V / RHM / RHC

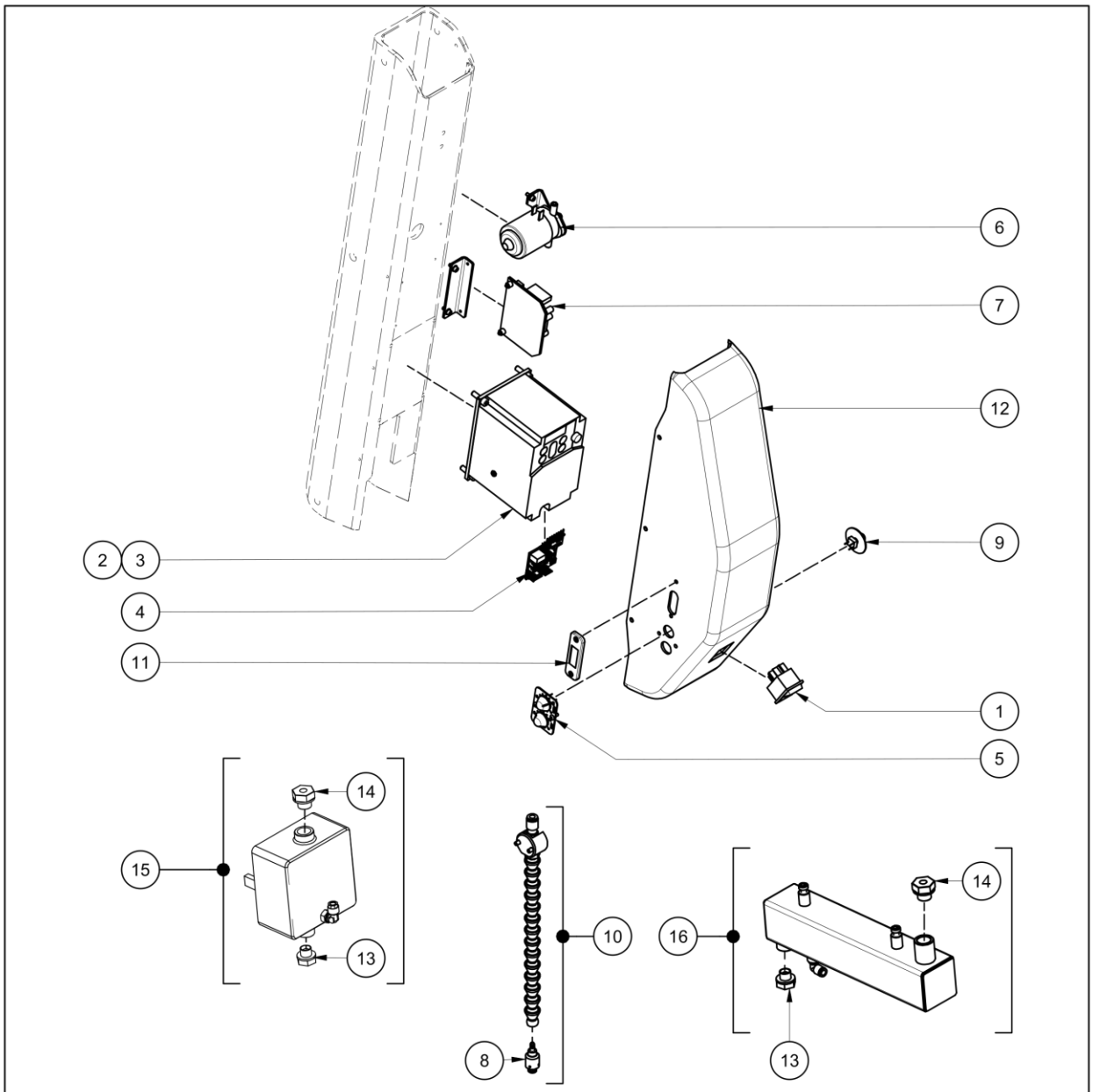

LUBRICATION / CONTROL			
POS	CODE	DESCRIPTION	MODEL
1	EL010096	MAIN SWITCH	V / RHM / RHC
2	DR203004R	ELECTRONIC EQUIPMENT- FREQUENCY VARIATOR BOARD (220V.)	V / RHM / RHC
3	DR100300R	ELECTRONIC EQUIPMENT- FREQUENCY VARIATOR BOARD (110V.)	V / RHM / RHC
4	MO5017B3	CENTRAL CONNECTIONS BOARD	V / RHM / RHC
5	MO4003A4	2 SPEEDS POTENTIOMETER	V / RHM / RHC
6	NH120976	LUBRICATION PUMP	V / RHM / RHC
7	MO300703	LUBRICATION BOARD	V / RHM / RHC
8	61130105	LUBRICATION NIPPLE	V / RHM / RHC
9	DR102700R	LUBRICATION CONTROL BUTTON + POTENTIOMETER	V / RHM / RHC
10	MO300504	ARTICULATED PIPE FOR LUBRICATION	V / RHM / RHC
11	MO107100	DISPLAY THREAD COUNTER SPARE	V / RHM / RHC
12	DR200903	DRAGON VARIATOR COVER	V / RHM / RHC
13	CL050566	DRAIN PLUG	V / RHM / RHC
14	40400903	FILLER PLUG	V / RHM / RHC
15	DR103800	OIL TANK	RHC
16	DR103900	OIL TANK	V / RHM

12 GUIDELINES FOR PACKAGING, TRANSPORT AND DISASSEMBLY

12.1 PACKAGING

Follow the instructions below for packaging the device to change location or to ship it for repair and maintenance.

12.1.1 Preparations

The device must be taken out of service.
Using straps during transport will prevent movement and possible damage to the equipment.

12.1.2 Choice of packaging

During long-distance transport, the device's component parts must be packaged appropriately to protect them against weather damage.

12.1.3 Inscription on packaging

Follow the specific provisions of the country where transport is taking place. For completely closed packages, a label must be placed on the package indicating which end is up.

12.1.4 Packing procedure

Place the device on manufactured wooden pallets. Using tie-down straps, secure the components to keep them from falling. Attach all accompanying technical documentation required for the device.

12.2 TRANSPORT

The following information must be considered when transporting the device.
External dimensions according to the segment (1,350 x 320 x 800 mm), approx. In mm
Total weight (according to segment): 36.5 kg.

12.3 DISASSEMBLY

- ✓ The equipment must be taken out of service by properly trained and authorised personnel.
- ✓ The equipment must be disassembled taking into account instructions on safety, waste disposal and recycling instructions.
- ✓ Protect the environment. The equipment must be disposed of following standards and directives in force in the areas of safety, noise prevention, environmental protection and accident prevention.

NOTES

DATE	DESCRIPTION

CE DECLARATION OF CONFORMITY

The manufacturer:

Company: TECNOSPIRO MACHINE TOOL, S.L.U.
Address: P.I. Pla dels Vinyats I, s/n nau 1
City: Sant Joan de Vilatorrada - 08250
County: Spain - EU

Declares that this product:

Model name: ROSCAMAT DRAGON
Model: V, V E, RHM, RHM E, RHC, RHC E, V - 110V, V E – 110V RHM – 110V, RHM E – 110V, RHC – 110V, RHC E – 110V
Based on serial number: 002-014 (consecutive)

Conforms with Directive 2006/42/EC on machinery, Directive 2014/35/EU on electrical equipment designed for use within certain voltage limits (low voltage), Directive 2011/65/EU on restriction of the use of certain hazardous substances in electrical and electronic equipment and Directive 2014/30/EU certified by the TELPRO CE laboratory, Av. Ca n'Enric, 39, 08197 Sant Cugat (Valldoreix), Barcelona.

Authorised for documentation:

Ramon Jou Parrot, TECNOESPIRO MACHINE TOOL, S.L.U.

Sant Joan de Vilatorrada, Monday, 23 January 2023

TECNOSPIRO MACHINE TOOL SL

Ramon Jou Parrot, Chief Engineering Officer

ROSCAMAT®

TECNOSPIRO MACHINE TOOL SLU

ROSCAMAT®
APPENDIX

ROSCAMAT ANNEX

1 TAPPING ACCESSORIES

QUICK-CHANGE TOOL HOLDER

A wide range of tap holders with and without clutch, as well as other tools for quickly attaching different tools, such as drill bits, countersinking bits, die stocks, socket spanners, etc.

•Tap holder with safety clutch
(to ensure it slips when it reaches the bottom of the hole)

•Tap holder without safety clutch
(to attach different tools with a cylindrical handle and drive)

Type 1 – Ø19 mm: capacity M2–M16
(for 300, 550, 750, 1050 modules)

Type 2 – Ø31 mm: capacity M14–M30
(for 90, 170 modules)

Type 3 – Ø 48 mm: capacity M30–M42
(for the 40 modules)

STANDARD MEASUREMENTS

Metric	Ø Coupl.	Ø Shaft	□	Standard
M3	19	3.5	2.7	DIN 371
M4	19	4.5	3.4	DIN 371
M5	19	6	4.9	DIN 371
M6	19	6	4.9	DIN 376
M7	19	7	5.5	DIN 376
M8	19	8	6.2	DIN 376
M10	19	10	8	DIN 376
M12	19	9	7	DIN 376
M14	19/31	11	9	DIN 376
M16	19/31	12	9	DIN 376
M18	31	14	11	DIN 376
M20	31	16	12	DIN 376
M22	31	18	14.5	DIN 376
M24	31	18	14.5	DIN 376
M27	31	20	16	DIN 376
M30	31/48	22	18	DIN 376
M33	48	25	20	DIN 376
M36	48	28	22	DIN 376
M39	48	32	24	DIN 376
M42	48	32	24	DIN 376

STOCK HOLDER

For threading with stocks
Capacity M5–M27

LONG STOCK HOLDER

For stock-guided threads.

Types:
– Long stock holder 19/1 M5–M6
– Long stock holder 19/1 M8
– Long stock holder 19/1 M10
– Long stock holder 19/1 M12–M14
– Long stock holder 31/2 M16–M18–M20

Please enquire about other measurements
Capacities from M6–M27

QUICK-CHANGE EXTENSION

80-mm extension for head assembly tool, allowing access to hard-to-reach areas.
Ø coupling = Ø19 mm

REDUCER BUSHING

To adapt different coupling diameters of tap holders to modules with different output dimensions.

PROBES

Two models available (19 and 31). Angled threading tools.

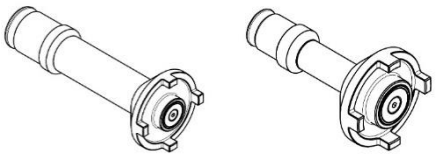

2 MODULAR SYSTEM

2.1 TIGER AND DRAGON MODULES

MODULE	Max. speed (rpm)	Max. torque		Ø Adaptor	Tapping capacity – steel < 90 kg	
		Nm	Ft · lb		Metric	Inches
90	90	150	110	Ø31	M16-M27	$^5/_8$" – 1 $^1/_8$
170	170	79	58	Ø31	M16-M20	$^5/_8$" – $^3/_4$"
300	300	44	32	Ø19	M2-M16	$^1/_8$ – $^5/_8$"
550	550	24	15	Ø19	M2-M12	$^1/_8$ – $^1/_2$"
750	750	17	13	Ø19	M2-M10	$^1/_8$ – $^3/_8$"
1050	1050	12.5	9	Ø19	M2-M8	$^1/_8$ – $^3/_8$"
2100	2100	6	4	B-16 cone	Drills up to Ø8 aluminium, cast iron, etc.	

2.2 SHARK MODULES

MODULE	Max. speed (rpm)	Max. torque		Ø Adaptor	Tapping capacity – steel < 90 kg	
		Nm	Ft · lb		Metric	Inches
40	40	340	251	Ø48/3	M27-M36	1 $^1/_8$" – 1 $^3/_8$"
75	75	185	136	Ø31/2	M18-M27	$^3/_4$" – 1 $^1/_8$"
140	140	95	70	Ø31/2	M18-M22	$^3/_4$" – $^7/_8$"
320	320	44	32	Ø19/1	M2-M16	$^1/_8$ – $^5/_8$"
500	500	28	21	Ø19/1	M2-M12	$^1/_8$ – $^1/_2$"
900	900	15	11	Ø19/1	M2-M8	$^1/_8$ – $^3/_8$"

3 ACCESSORIES

NOT all the accessories shown below are compatible with your arm, for this see the compatibility table *[See* ROSCAMAT COMPATIBILITY TABLE *p. 58]*

TABLES

(1)

(2)

(3)

Four wheels (two with brake)
Slots for fastening parts or tools.
Supports for tap holder or tools.

CODE	DESCRIPTION	DIMENSIONS		MAX. LOAD
TP0001A0	Small table (1)	500 x 500 x 900 mm	19 11/16″ x 19 11/16″ x 35 7/16″	100 kg
TF0001A0	Mid-size table (2)	850 x 850 x 850 mm	33 7/16″ x 33 7/16″ x 33 7/16″	200 kg
907B00A0	Large table (3)	1100 x 850 x 850 mm	43 5/16″ x 33 7/16″ x 33 7/16″	500 kg

SUPPORTS

(1)

(2)

Clamp for securing the machine
Magnetic support for placing it on a metal surface and securing the machine

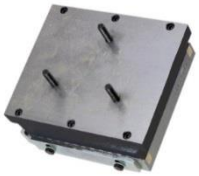

(3)

CODE	DESCRIPTION	DIMENSIONS
BR000100	Small clamp (1)	N/A
BR100100	Large clamp (2)	N/A
IA000100	Magnetic support (3)	150x150
IB000100	Magnetic support (4)	Ø200
IC000100	Magnetic support (5)	Ø250

(4)(5)

TROLLEY

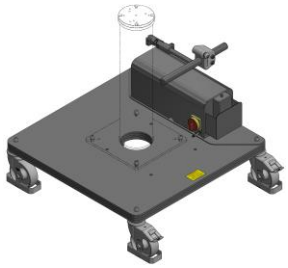

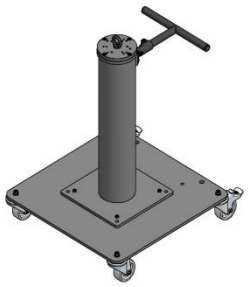

To move the work unit.
It has four orientable wheels.

DESCRIPTION	DIMENSIONS	
Trolley 700	700x700 mm	27 9/16″ x 27 9/16″
Trolley 900	900x900 mm	35 7/16″ x 35 7/16″
Electrical trolley	900x900 mm	35 7/16″ x 35 7/16″
Electrical trolley	800x800 mm	31 1/2″ x 31 1/2″

*Code according to load

FIXED COLUMN

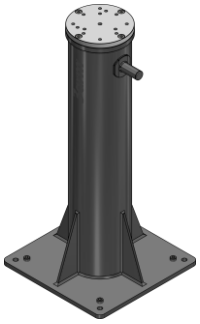

To secure to the floor using four metal studs.

CODE	DESCRIPTION/DIMENSIONS	
CL144000	Column 62 mm	2 ½ ″
CL115800	Column 112 mm	4 3/8″
CL128900	Column 162 mm	6 3/8″
CL140800	Column 275 mm	10 7/8″
CL115400	Column 375 mm	14 ¾″
CL144800	Column 450 mm	17 ¾″
CL145300	Column 635 mm	25″
CL007004	Column 740 mm	29 1/8″
CL005300	Column 850 mm	33 ½″
CL145700	Column 1100 mm	43 ¼″
CL145800	Column 1350 mm	53 1/8″
CL146100	Column 1600 mm	63″

PNEUMATIC LIFTER

It consists of a telescopic column and a pneumatic cylinder with anti-rotation.

DESCRIPTION	VERTICAL STROKE
Pneumatic lifter 300	300 mm – 11 7/8″
Pneumatic lifter 500	500 mm – 19 7/8″
Pneumatic lifter 750	750 mm – 29 17/32″

D63 PNEUMATIC LIFTER

Pneumatic lift. The vertical position can be locked at any point, it has a pneumatic cylinder. It can be secured to the ground, on a trolley or on the ground rail to have movement on two shafts.

DESCRIPTION	VERTICAL STROKE
1500 D63 Pneumatic lifter	940 mm – 37″
2000 D63 Pneumatic lifter	1440 mm – 56 11/16″
2500 D63 Pneumatic lifter	1940 mm – 76 3/8″

RADIAL EXTENSION

(1)

Extender that enables the arm's working area to be increased. It can also be installed on other accessories, such as column, lift, linear guide, etc.

(2)

CODE	DESCRIPTION	ADDITIONAL WORK AREA
ER0010C0	Radial extension 500 (1)	500 mm – 19 11/16″
ER000100	Radial extension 1000 (2)	1000 mm – 39 3/8″

FLOOR RAIL

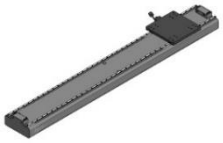

Rail to fasten to the floor and on which the different columns and lifts can be fastened. Several sections can be joined from a base section 2 m. The horizontal position can be locked at any point.

CODE	DESCRIPTION	STROKE
CL040000	Floor rail	1520 mm – 59 13/16″

LINEAR GUIDE

Guide for the horizontal movement of the arm. Several sections can be joined from a base section 2 m. This may be table-top, fixed to the wall or ceiling, or on pillars of various heights that can be selected. The horizontal position can be locked at any point.

CODE	DESCRIPTION	STROKE
CL023300	Linear guide 1000	635 mm – 25″
CL020000	Linear guide 2000	1635 mm – 64 3/8″
CL023000	Linear guide 3000	2635 mm – 103 3/4″

4 ROSCAMAT COMPATIBILITY TABLE

ACCESSORY	SERIES – ROSCAMAT						
	200	400	500	Mosquito	Tiger	Shark	Dragon
RADIAL EXTENSION	●	●	●	●	●	●	●
TROLLEY + FIXED COLUMN	●	●	●	☐700x20	☐700x25	☐700x30	☐700x35
FIXED COLUMN	●	●	●	●	●	●	●
PNEUMATIC LIFTER	●	●	●	●	●	●	●
D63 PNEUMATIC LIFTER	●	●	●	●	●	●	●
FLOOR RAIL	●	●	●	●	●	●	●
LINEAR GUIDE	●	●	⊘	●	⊘	⊘	⊘
SMALL TABLE (500)	●	●	⊘	●	⊘	⊘	⊘
MID-SIZE TABLE (850 x 850)	●	●	●	●	●	*	*
LARGE TABLE (1110 x 850)	●	●	●	●	●	●	●
SMALL CLAMP	●	●	⊘	●	⊘	⊘	⊘
LARGE CLAMP	●	●	●	●	●	●	●
MAGNETIC SUPPORT	☐150	Ø200	Ø250	Ø200	Ø250	Ø250	Ø250

● = Compatible
⊘ = NOT Compatible
* = Request information

5 TECHNICAL INFORMATION

5.1 MOTOR – PROPERTIES

High frequency electric motor

- Power: 650 W
- Frequency: 1-250Hz
- Single phase; Voltage: 220–240 V
- Noise level: 74 dBA

5.2 ELECTRONIC VARIATOR PROPERTIES

5.2.1 Variable frequency drive (used in 230V versions)

Nominal dimensions			Technical Specifications
Nominal power of motor			0.75 kW
Output properties	Nominal power (kVA)		2.0 kVA
	Nominal voltage (V)		Three-phase, 200 to 240V (with AVR function)
	Nominal current		5.5 A.
	Overload capacity		150% of nominal output current for 1 min. 200% of nominal output current for 0.5 sec.
	Nominal frequency (Hz)		1-400 Hz
Input properties	Phases, voltage, frequency		Single phase, 200 to 240 V 50/60 Hz
	Tolerances		Voltage: +10 to -15% Frequency: +5% to -5%
	Nominal current	(With DC reactance)	6.4 A.
		(Without DC reactance)	9.7 A.
	Power required from the electricity supply (kVA)		1.3 kVA
Brakes	Brake torque (%)		100 (average brake torque with AVR off)
	DC brake injection		Start frequency: 0.0–60.0 Hz Braking time: 0.0–30.0 secs Brake current: 0–100% of nominal current
	Braking transistor		Built-in
Applicable safety standards			UL508C, IEC61800-5-1:2007
Protection type			IP20 (IEC 60529), UL open type (UL50)
Cooling			Natural cooling
Weight			0.9 kg

5.2.2 Variable frequency drive (used in 120V versions)

Nominal dimensions			Technical Specifications
Nominal power of motor			0.4 kW
Output properties	Nominal power (kVA)		0.95 kVA
	Nominal voltage (V)		Three-phase, 200 to 240V (with AVR function)
	Nominal current		2.5 A.
	Overload capacity		150% of nominal output current for 1 min. 200% of nominal output current for 0.5 sec.
	Nominal frequency (Hz)		1-400 Hz
Input properties	Phases, voltage, frequency		Single phase, 100 to 120 V 50/60 Hz
	Tolerances		Voltage: +10 to -10% Frequency: +5% to -5%
	Nominal current	(With DC reactance)	6.4 A.
		(Without DC reactance)	9.5 A.
	Power required from the electricity supply (kVA)		0.7 kVA
Brakes	Brake torque (%)		100 (average brake torque with AVR off)
	DC brake injection		Start frequency: 0.0–60.0 Hz Braking time: 0.0–30.0 secs Brake current: 0–100% of nominal current
	Braking transistor		Built-in
Applicable safety standards			UL508C, IEC61800-5-1:2007
Protection type			IP20 (IEC 60529), UL open type (UL50)
Cooling			Fan
Weight			0.8 kg

5.3 TABLE OF TORQUE – THREAD SIZE – MODULES (DRAGON)

<table>
<tr><th>TORQUE</th><th>SIZE</th><th>WHITWORTH</th><th>GAS</th><th>STEEL > 80</th><th>STEEL < 80
CAST
BRONZE < 40</th><th>ALUMINIUM
PLASTIC</th></tr>
<tr><td>0.5
0.6
0.8</td><td>M3</td><td>1/8”</td><td></td><td rowspan="3">1050</td><td rowspan="5">1050</td><td rowspan="5">1050</td></tr>
<tr><td>1
1.2
1.6
2
2.5</td><td>M4
M5</td><td>5/32”</td><td></td></tr>
<tr><td>3
4
5</td><td>M6</td><td>3/16”
7/32”
1/4”</td><td></td></tr>
<tr><td>6</td><td></td><td></td><td>G 1/8”</td><td rowspan="2">750</td></tr>
<tr><td>8</td><td>M8</td><td></td><td></td></tr>
<tr><td>10</td><td></td><td>5/16”</td><td></td><td>550</td><td rowspan="2">750</td><td rowspan="3">750</td></tr>
<tr><td>12
16</td><td>M10</td><td>3/8”</td><td></td><td rowspan="4">300</td></tr>
<tr><td>18
20</td><td></td><td></td><td>G 1/4”</td><td rowspan="2">550</td></tr>
<tr><td>22</td><td>M12</td><td>7/16”</td><td>G 3/8”</td></tr>
<tr><td>25
28
32
36</td><td>M14</td><td>1/2”</td><td></td><td rowspan="2">300</td><td rowspan="2">550</td></tr>
<tr><td>40</td><td>M16</td><td>9/16”</td><td></td><td>170</td><td>300</td></tr>
<tr><td>45
50</td><td></td><td>5/8”</td><td>G 1/2”</td><td rowspan="3">90</td><td rowspan="2">170</td><td rowspan="3">170</td></tr>
<tr><td>56
63</td><td>M18</td><td></td><td>G 5/8”</td></tr>
<tr><td>70
80</td><td>M20
M22</td><td>3/4”</td><td>G 3/4”
G 7/8”</td><td rowspan="4">90</td></tr>
<tr><td>90
100
110</td><td></td><td>7/8”</td><td></td><td rowspan="3"></td><td rowspan="4">90</td></tr>
<tr><td>125</td><td>M24</td><td></td><td></td></tr>
<tr><td>140</td><td>M27</td><td>1”</td><td>G 1”</td><td></td></tr>
<tr><td>220</td><td>M30</td><td>1 1/8”</td><td>G 1 1/2”</td><td></td><td></td></tr>
</table>

5.4 CLUTCH TORQUE ADJUSTMENTS FOR TAPPING (Nm)

Metric thread	Steel > 100 kg	Steel 80–100 kg	Steel < 80 kg	Aluminium Grey Iron
3	0.9	0.6	0.5	0.4
4	2	1.3	1.2	0.8
5	3	2	2	1.3
6	5	4	4	2.4
8	11	8	8	5
10	20	15	14	9
12	33	24	23	14
14	50	36	35	22
16	57	42	40	26
18	101	73	70	45
20	112	81	78	50
22	123	90	86	55
24	194	140	135	86
27	218	158	152	97
30	330	240	230	150
33	364	260	252	160
36	-	-	280	230
39	-	-	-	250
42	-	-	-	340

5.5 MACHINE THREAD TAPS

Blind hole	Tap with helical grooves.	Lubrication.
Lubrication	Tap with straight grooves and helical entry.	
Steel > 80 kg	Ang. cutting 8–10.	Cutting fluid with additives.
Steel < 80 kg	Ang. cutting 12–14.	Cutting fluid.
Steel < 50 kg Stainless steel	Ang. cutting 14–16. Treatment of surface	
Soft iron casting	Tap with straight grooves. Treatment of Nitride Surface Ang. cutting 5.	Petroleum, cutting fluid, dry
Duralumin	Ang. cutting 12–15.	Cutting fluid, dry
Aluminium	Ang. cutting 17–25.	Cutting fluid with additives.
Plastic		Cutting fluid, dry